SAC-5P-10,0-PVC/M12FR - Sensor/actuator cable

1415689

https://www.phoenixcontact.com/us/products/1415689

Please be informed that the data shown in this PDF document is generated from our online catalog. Please find the complete data in the user documentation. Our general terms of use for downloads are valid.

Sensor/actuator cable, 5-position, PVC, black RAL 9005, free cable end, on Socket angled M12, coding: A, cable length: 10 m

Your advantages

- Easy and safe: 100 % electrically tested plug-in components

Commercial data

Item number	1415689
Packing unit	1 pc
Minimum order quantity	1 pc
Sales key	BF03
Product key	AF1CDA
GTIN	4055626050508
Weight per piece (including packing)	400 g
Weight per piece (excluding packing)	400 g
Customs tariff number	85444290
Country of origin	DE

Technical data

Product properties

Product type	Sensor/actuator cable
Application	Standard
Number of positions	5
No. of cable outlets	1
Shielded	no
Coding	A

Insulation characteristics

Overvoltage category	II
Degree of pollution	3

Material specifications

Flammability rating according to UL 94	HB
Seal material	NBR
Material of grip body	TPU, hardly inflammable, self-extinguishing
Contact material	CuSn
Contact surface material	Ni/Au
Contact carrier material	TPU GF
Material for screw connection	Zinc die-cast, nickel-plated

Electrical properties

Insulation resistance	≥ 100 MΩ
Nominal voltage U_N	48 V AC
	60 V DC
Nominal current I_N	4 A

Mechanical properties

Mechanical data

Insertion/withdrawal cycles	≥ 100

Signaling

Status display	no
Status display present	no

Connector

Connection 1

Type	free cable end

Connection 2

Type	Socket angled M12
Number of positions	5

Coding type	A

Cable/line

Cable length	10 m

PVC black [PVC]

Dimensional drawing	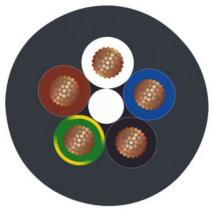
Cable weight	51 kg/km
UL AWM Style	2464 / 1729 (80°C/300 V)
Number of positions	5
Shielded	no
Cable type	PVC black [PVC]
Conductor structure signal line	19x 0.15 mm
AWG signal line	22
Conductor cross-section	5x 0.34 mm² (Signal line)
Wire diameter incl. insulation	1.26 mm ±0.05 mm
External cable diameter	5.00 mm ±0.15 mm
Outer sheath, material	PVC
External sheath, color	black RAL 9005
Conductor material	Bare Cu litz wires
Material wire insulation	PVC
Single wire, color	brown, white, blue, black, green-yellow
Thickness, insulation	≥ 0.23 mm (Core insulation)
Thickness, outer sheath	≥ 0.76 mm
Overall twist	5 wires around filler to the core
Max. conductor resistance	max. 57 Ω/km (at 20 °C)
Insulation resistance	≥ 200 MΩ*km (at 20 °C)
Nominal voltage, cable	≤ 300 V
Test voltage	≥ 3000 V
Minimum bending radius, fixed installation	5 x D
Minimum bending radius, flexible installation	10 x D
Smallest bending radius, fixed installation	25 mm
Smallest bending radius, movable installation	50 mm
Flame resistance	UL VW-1
Resistance to oil	in accordance with DIN EN 60811-2-1
Ambient temperature (operation)	-25 °C ... 80 °C (cable, fixed installation)
	-10 °C ... 80 °C (Cable, flexible installation)

Environmental and real-life conditions

Ambient conditions

Degree of protection	IP65
	IP67
	IP68
Ambient temperature (operation) (male connector/female connector)	-25 °C ... 90 °C (Plug / socket)

Standards and regulations

Standard designation	M12 connector
Standards/specifications	IEC 61076-2-101

Drawings

Dimensional drawing

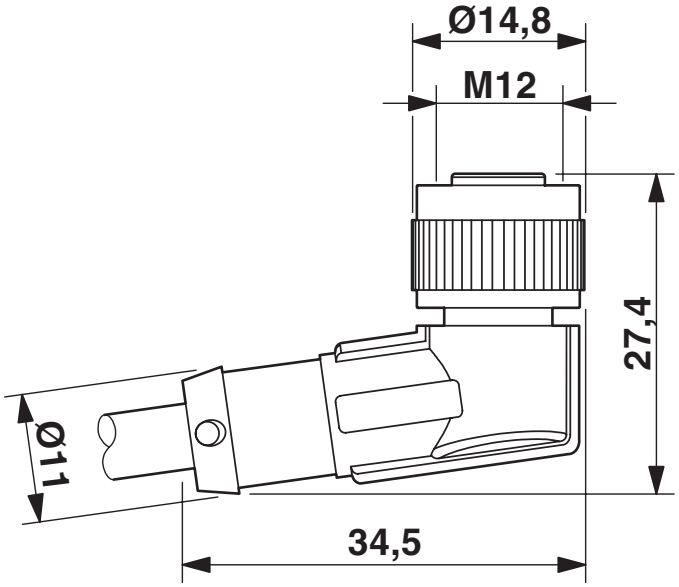

M12 x 1 socket, angled

Schematic diagram

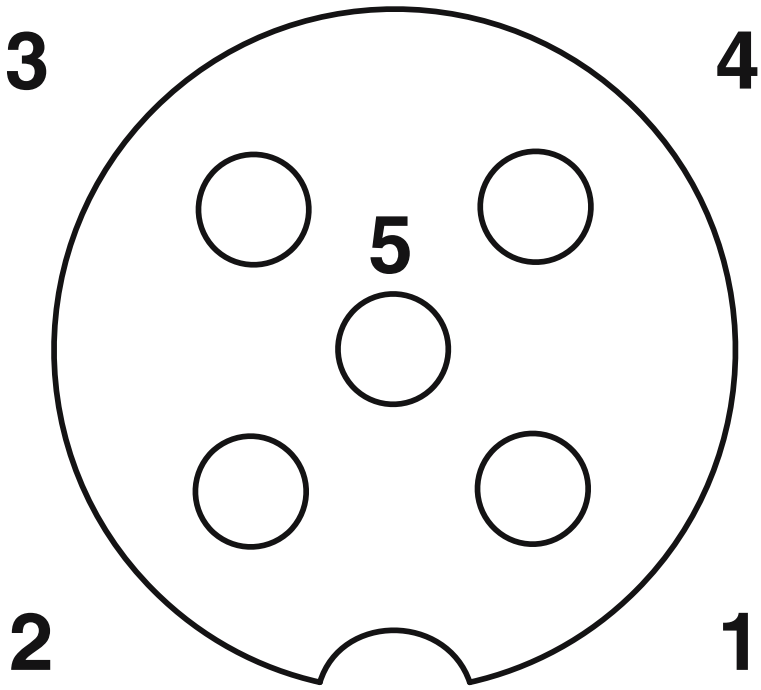

Pin assignment M12 socket, 5-pos., A-coded, socket side view

Circuit diagram

Contact assignment of the M12 sockets

Approvals

To download certificates, visit the product detail page: https://www.phoenixcontact.com/us/products/1415689

UL Listed
Approval ID: FILE E 221474

	Nominal voltage U_N	Nominal current I_N	Cross section AWG	Cross section mm^2
keine				
	125 V	4 A	-	-

cUL Listed
Approval ID: FILE E 221474

	Nominal voltage U_N	Nominal current I_N	Cross section AWG	Cross section mm^2
keine				
	125 V	4 A	-	-

EAC-RoHS
Approval ID: RU D-DE.HB35.B.00387

Classifications

ECLASS

ECLASS-13.0	27060311
ECLASS-15.0	27060311

ETIM

ETIM 10.0	EC001855

UNSPSC

UNSPSC 21.0	26121600

Environmental product compliance

EU RoHS

Fulfills EU RoHS substance requirements	Yes, No exemptions

China RoHS

Environment friendly use period (EFUP)	EFUP-E
	No hazardous substances above the limits

EU REACH SVHC

REACH candidate substance (CAS No.)	No substance above 0.1 wt%

Phoenix Contact 2026 © - all rights reserved
https://www.phoenixcontact.com

Phoenix Contact USA
586 Fulling Mill Road
Middletown, PA 17057, United States
(+717) 944-1300
info@phoenixcon.com