SACC-M12FSX-8QO SH PN - Data connector

1414587

https://www.phoenixcontact.com/us/products/1414587

Please be informed that the data shown in this PDF document is generated from our online catalog. Please find the complete data in the user documentation. Our general terms of use for downloads are valid.



Data connector, PROFINET CAT6$_A$ (10 Gbps), 8-position, halogen-free, shielded, Socket straight M12, coding: X, Insulation displacement connection, knurl material: Zinc die-cast, nickel-plated, external cable diameter 5 mm ... 10 mm

Your advantages

- Safe use in the field, thanks to a high degree of protection
- Insulation displacement connection: innovative and time-saving assembly without stripping the single wire
- Reliable signal transmission – 360° shielding in environments with electromagnetic interference

Commercial data

Item number	1414587
Packing unit	1 pc
Minimum order quantity	1 pc
Sales key	BF31
Product key	AF2CDN
GTIN	4055626029245
Weight per piece (including packing)	47 g
Weight per piece (excluding packing)	47.4 g
Customs tariff number	85366990
Country of origin	DE

Technical data

Notes

Assembly note	NOTE: Observe the permissible bending radii when routing cables, since the degree of protection may be at risk if the bending forces are too high. Reduce mechanical loads upstream of the connector, e.g., by using cable ties.

Product properties

Product type	Circular connector (cable-side)
Application	Data
Number of positions	8
No. of cable outlets	1
Shielded	yes
Coding	X
Cable outlet	straight

Insulation characteristics

Overvoltage category	II
Degree of pollution	3

Dimensions

Dimensional drawing	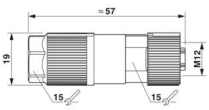
Length	57 mm
Wrench size, union nut	15 mm

External dimensions

Outside diameter	5 mm ... 10 mm

Housing

Diameter housing	19 mm

Material specifications

Flammability rating according to UL 94	V0
Seal material	NBR
Material of grip body	Zinc die-cast, nickel-plated
Contact material	CuSn
Contact surface material	Ni/Au
Contact carrier material	PA 6.6
Material for screw connection	Zinc die-cast, nickel-plated
Wire insulation material	PVC / PE / PP / rubber

Connection data

Conductor connection

Connection method	Insulation displacement connection
Connection cross section	0.25 mm² ... 0.5 mm² (flexible)
	0.25 mm² ... 0.5 mm² (solid)
Connection cross section AWG	24 ... 20 (flexible)
	24 ... 20 (solid)
Tightening torque	M12 knurl
	5 Nm (Pressure nut)

Connection assignment

Contact | Color (signal designation) | Contact (optional)	1 = YE
	2 = OG
	3 = WH
	4 = BU

Electrical properties

Rated surge voltage	0.8 kV
Insulation resistance	≥ 100 MΩ
Nominal voltage U_N	48 V AC
	60 V DC
Nominal current I_N	0.5 A
Transmission speed	10 Gbps

Mechanical properties

Mechanical data

Insertion/withdrawal cycles	≥ 100

Connector

Connection 1

Head design	Socket
Head cable outlet	straight
Head thread type	M12
Coding	X

Interfaces

Signal type/category	PROFINET $CAT6_A$ (IEC 11801), 10 Gbps

Environmental and real-life conditions

Ambient conditions

Degree of protection	IP65
	IP67

Ambient temperature (operation)	-40 °C ... 85 °C (Plug / socket)
Ambient temperature (assembly)	-5 °C ... 50 °C

Standards and regulations

Standards/regulations	PA 6.6: Fire protection in rail vehicles - requirement sets R22, R23, R24, and R26 acc. to DIN EN 45545-2 (Risk level HL1 - HL3)
Standard designation	M12 connector
Standards/specifications	according to IEC 61076-2-109
Standard designation	Shock, vibration
Standards/specifications	EN 50155:2001

Drawings

Dimensional drawing

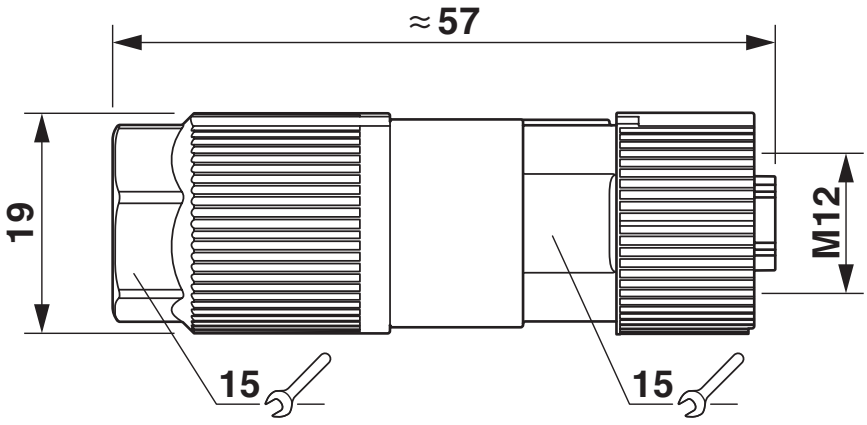

M12 x 1 socket, straight, shielded

Functional drawing

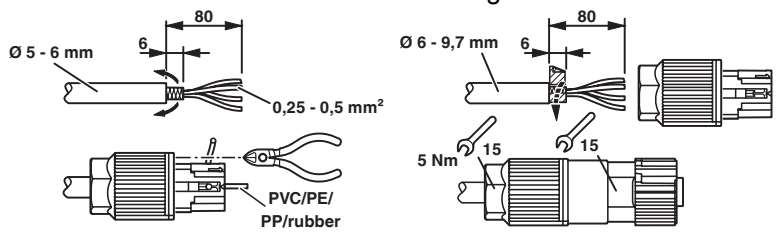

Schematic diagram

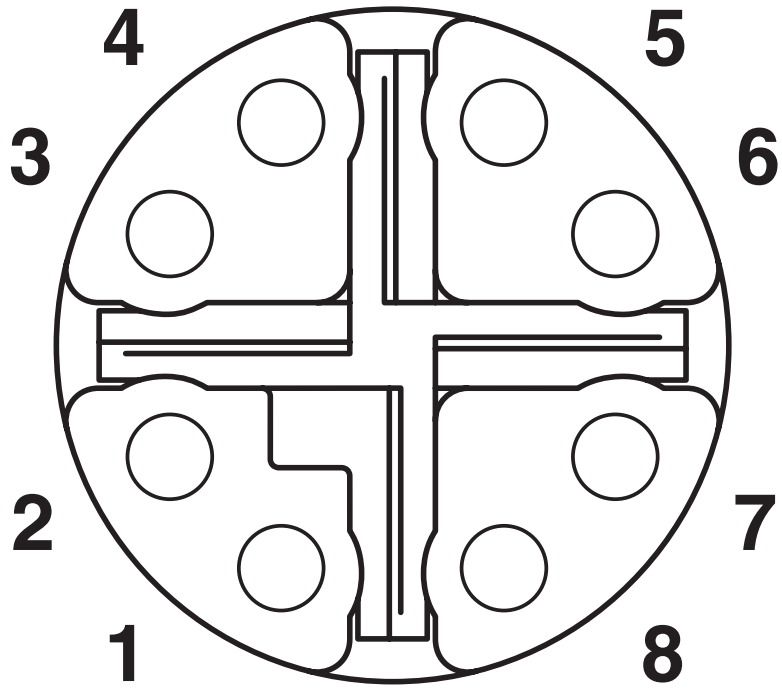

M12 socket pin assignment, 8-pos, view of socket side

Approvals

To download certificates, visit the product detail page: https://www.phoenixcontact.com/us/products/1414587

UL Listed
Approval ID: E335024-20120831

cUL Listed
Approval ID: E335024-20120831

Classifications

ECLASS

ECLASS-13.0	27440116
ECLASS-15.0	27440116

ETIM

ETIM 10.0	EC002635

UNSPSC

UNSPSC 21.0	39121400

Environmental product compliance

EU RoHS

Fulfills EU RoHS substance requirements	Yes, No exemptions

China RoHS

Environment friendly use period (EFUP)	EFUP-E
	No hazardous substances above the limits

EU REACH SVHC

REACH candidate substance (CAS No.)	No substance above 0.1 wt%

EF3.1 Climate Change

CO2e kg	16.235 kg CO2e

Phoenix Contact 2026 © - all rights reserved
https://www.phoenixcontact.com

Phoenix Contact USA
586 Fulling Mill Road
Middletown, PA 17057, United States
(+717) 944-1300
info@phoenixcon.com