# CUC-BH-M12D1PBK-S/R4BE - Control cabinet feed-through

1414398

https://www.phoenixcontact.com/us/products/1414398

Please be informed that the data shown in this PDF document is generated from our online catalog. Please find the complete data in the user documentation. Our general terms of use for downloads are valid.

800 V
IEC



Control cabinet feed-through, M12, 4-pos., D-coded to RJ45 socket, socket entry: 180°, IP65/IP67

## Your advantages

- Compact design

## Commercial data

| | |
|---|---|
| Item number | 1414398 |
| Packing unit | 1 pc |
| Minimum order quantity | 1 pc |
| Sales key | AB18 |
| Product key | ABNPBB |
| GTIN | 4055626166759 |
| Weight per piece (including packing) | 34.4 g |
| Weight per piece (excluding packing) | 33.6 g |
| Customs tariff number | 85366990 |
| Country of origin | DE |

## Technical data

### Product properties

| | |
|---|---|
| Product type | Female insert |
| Number of positions | 4 |
| Connection profile | M12 |
| Shielded | yes |
| Cable outlet | straight |
| Thread type | M12 |

Insulation characteristics

| | |
|---|---|
| Overvoltage category | III |
| Degree of pollution | 2 |

### Electrical properties

| | |
|---|---|
| Maximum load current | 1.4 A |
| Rated voltage (III/3) | 72 V (DC) |
| Rated surge voltage | 0.8 kV |
| Rated current | 1.75 A |
| Nominal voltage $U_N$ | 48 V |
| Nominal current $I_N$ | 0.5 A |
| Transmission medium | Copper |
| Transmission speed | 100 Mbps |
| Transmission characteristics (category) | CAT5 (IEC 11801:2002) |
| Power transmission | PoE++ |

### Connection data

Connection technology

| | |
|---|---|
| Connection method | Coupling |

### Interfaces

| | |
|---|---|
| Signal type/category | Ethernet CAT5, 100 Mbps |

### Material specifications

| | |
|---|---|
| Flammability rating according to UL 94 | V0 |
| Housing material | Plastic |
| Material of grip body | PA |
| Contact material | Copper alloy |

### Connector

Connection 1

| | |
|---|---|
| Type | Socket M12 |
| Locking type | Screw connection |

| | |
|---|---|
| Coding type | D |
| Shielded | yes |
| Insertion/withdrawal cycles | ≥ 750 (RJ45) |
| Degree of protection | IP65/IP67 |

Connection 2

| | |
|---|---|
| Type | Socket RJ45 |
| Degree of protection | IP20 |

## Mechanical properties

Mechanical data

| | |
|---|---|
| Insertion/withdrawal cycles | ≥ 100 |

## Environmental and real-life conditions

Ambient conditions

| | |
|---|---|
| Degree of protection | IP65/IP67, when installed |
| Ambient temperature (operation) (male connector/female connector) | -25 °C ... 85 °C |

## Mounting

| | |
|---|---|
| Mounting type | Rear mounting |

## Drawings

Dimensional drawing

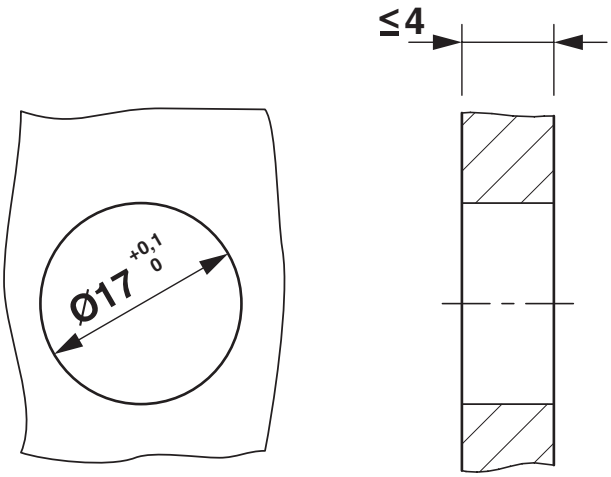


Mounting cutout

Exploded view

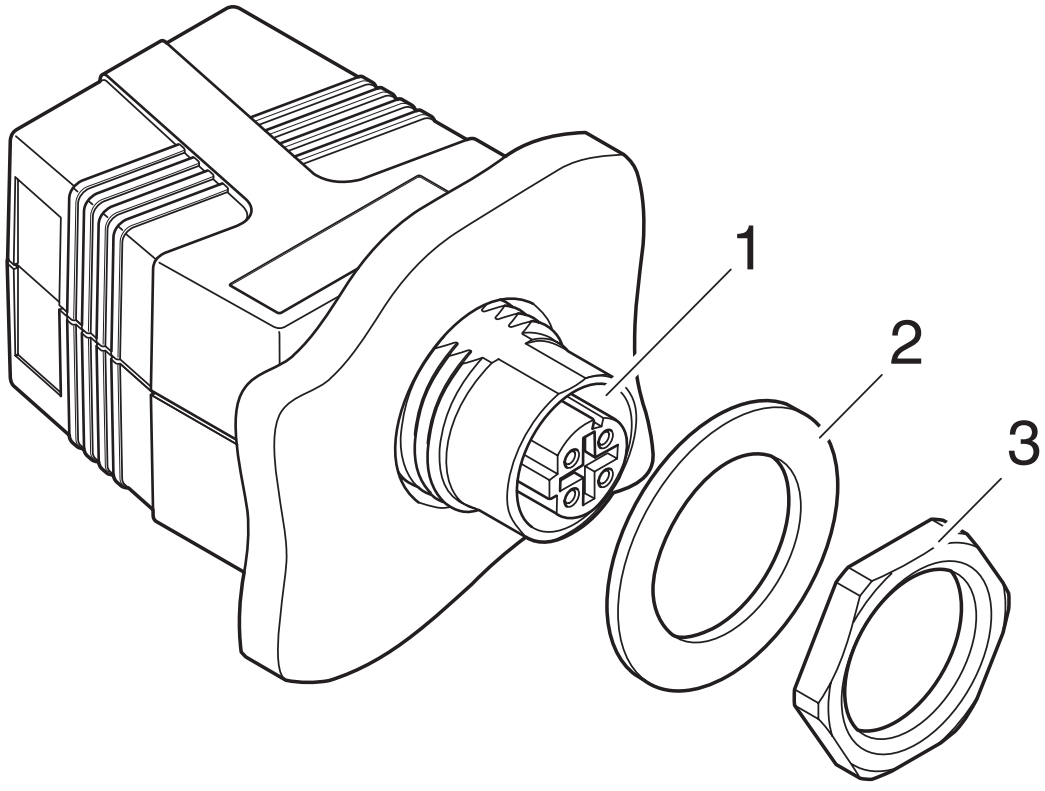


Exploded drawing

Schematic diagram

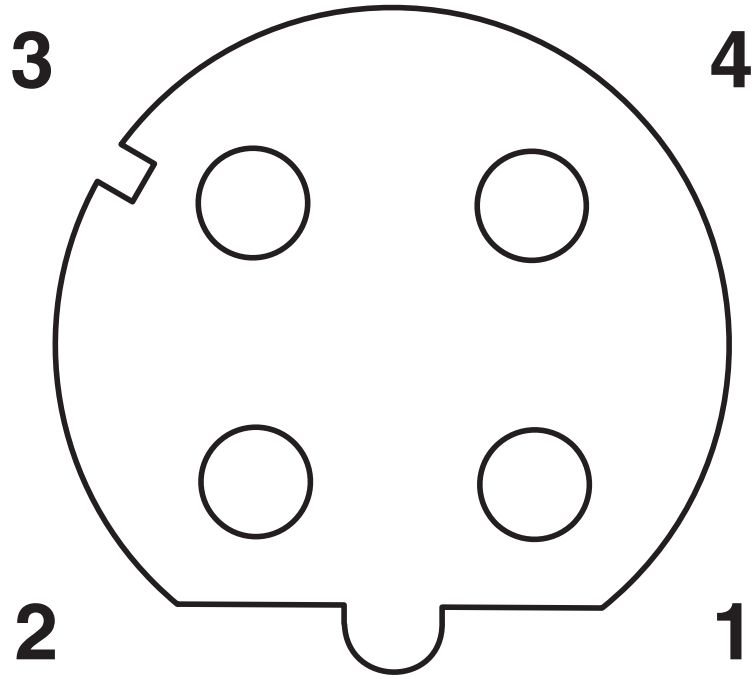


Pin assignment of M12 female, 4-pos., D-coded, view: female side

Schematic diagram

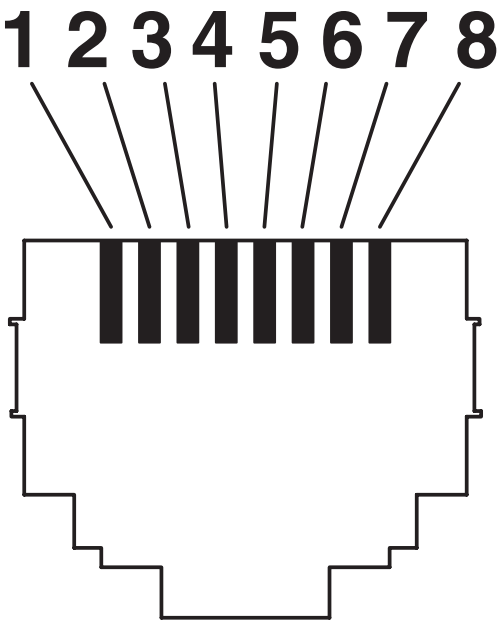


RJ45 jack insert

Circuit diagram

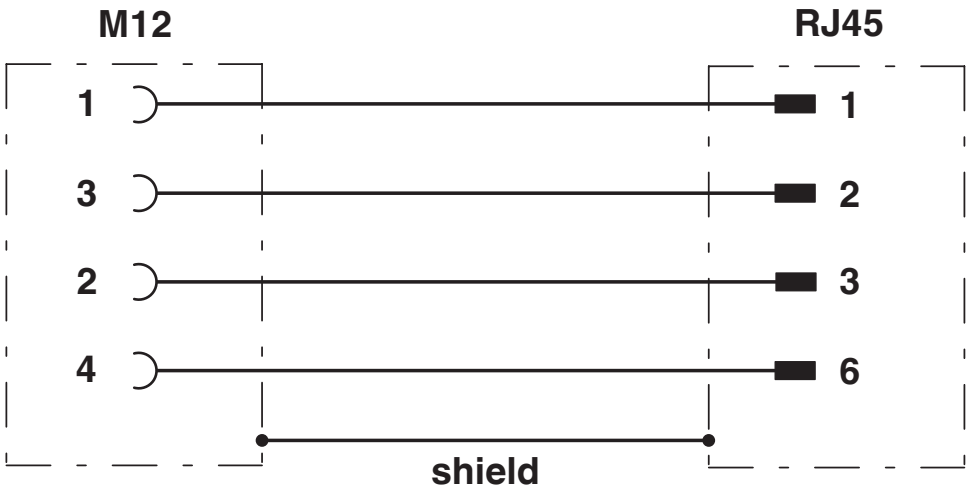


Circuit diagram

## Approvals

To download certificates, visit the product detail page: https://www.phoenixcontact.com/us/products/1414398

**UL Listed**
Approval ID: E335024-20140306

| | Nominal voltage $U_N$ | Nominal current $I_N$ | Cross section AWG | Cross section $mm^2$ |
|---|---|---|---|---|
| keine | | | | |
| | 60 V | 0.5 A | - | - |

**cUL Listed**
Approval ID: E335024-20140306

| | Nominal voltage $U_N$ | Nominal current $I_N$ | Cross section AWG | Cross section $mm^2$ |
|---|---|---|---|---|
| keine | | | | |
| | 60 V | 0.5 A | - | - |

## Classifications

### ECLASS

| | |
|---|---|
| ECLASS-13.0 | 27440390 |
| ECLASS-15.0 | 27440325 |

### ETIM

| | |
|---|---|
| ETIM 10.0 | EC001134 |

### UNSPSC

| | |
|---|---|
| UNSPSC 21.0 | 39121400 |

## Environmental product compliance

EU RoHS

| | |
|---|---|
| Fulfills EU RoHS substance requirements | Yes |
| Exemption | 6(c) |

China RoHS

| | |
|---|---|
| Environment friendly use period (EFUP) | EFUP-50 |
| | An article-related China RoHS declaration table can be found in the download area for the respective article under "Manufacturer declaration". For all articles with EFUP-E, no China RoHS declaration table issued and required. |

EU REACH SVHC

| | |
|---|---|
| REACH candidate substance (CAS No.) | Lead(CAS: 7439-92-1) |
| SCIP | 180e0036-1af6-4bf8-ae4c-315f201739bd |

EF3.1 Climate Change

| | |
|---|---|
| CO2e kg | 1.518 kg CO2e |


Phoenix Contact 2026 © - all rights reserved
https://www.phoenixcontact.com



Phoenix Contact USA
586 Fulling Mill Road
Middletown, PA 17057, United States
(+717) 944-1300
info@phoenixcon.com