CUC-BH-M12D1PBK-A/R4BE - Control cabinet feed-through

1414397

https://www.phoenixcontact.com/us/products/1414397

Please be informed that the data shown in this PDF document is generated from our online catalog. Please find the complete data in the user documentation. Our general terms of use for downloads are valid.

800 V
IEC



Control cabinet feed-through, M12, 4-pos., D-coded to RJ45 socket, socket entry: 90°, IP65/IP67

Your advantages

- Compact design

Commercial data

Item number	1414397
Packing unit	1 pc
Minimum order quantity	1 pc
Sales key	AB18
Product key	ABNPBB
GTIN	4055626166742
Weight per piece (including packing)	34 g
Weight per piece (excluding packing)	34 g
Customs tariff number	85366990
Country of origin	DE

Technical data

Product properties

Product type	Female insert
Number of positions	4
Connection profile	M12
Shielded	yes
Cable outlet	angled
Thread type	M12

Insulation characteristics

Overvoltage category	III
Degree of pollution	2

Electrical properties

Maximum load current	1.4 A
Rated voltage (III/3)	72 V (DC)
Rated surge voltage	0.8 kV
Rated current	1.75 A
Nominal voltage U_N	48 V
Nominal current I_N	0.5 A
Transmission medium	Copper
Transmission speed	100 Mbps
Transmission characteristics (category)	CAT5 (IEC 11801:2002)
Power transmission	PoE++

Connection data

Connection technology

Connection method	Coupling

Interfaces

Signal type/category	Ethernet CAT5, 100 Mbps

Material specifications

Flammability rating according to UL 94	V0
Housing material	Plastic
Material of grip body	PA
Contact material	Copper alloy

Connector

Connection 1

Type	Socket M12
Locking type	Screw connection

Coding type	D
Shielded	yes
Insertion/withdrawal cycles	≥ 750 (RJ45)
Degree of protection	IP65/IP67

Connection 2

Type	Socket RJ45
Degree of protection	IP20

Mechanical properties

Mechanical data

Insertion/withdrawal cycles	≥ 100 (M12 socket)

Environmental and real-life conditions

Ambient conditions

Degree of protection	IP65/IP67 (M12 socket)
	IP20 (RJ45 jack)
	IP65/IP67, when installed
Ambient temperature (operation) (male connector/female connector)	-25 °C ... 85 °C

Mounting

Mounting type	Rear mounting

Drawings

Dimensional drawing

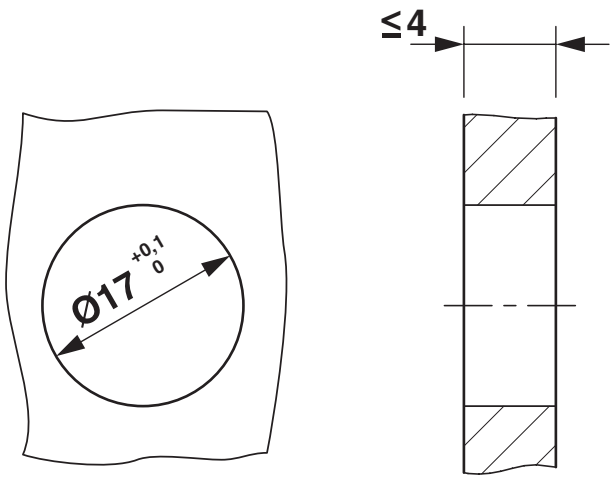

Mounting cutout

Exploded view

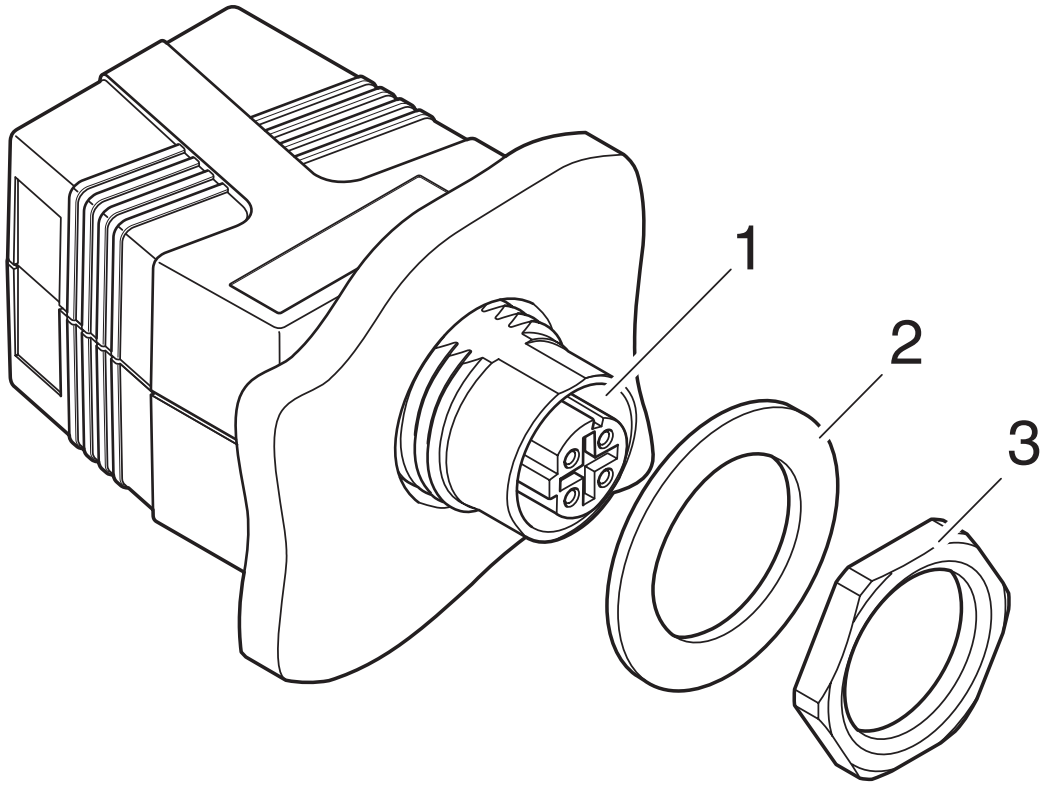

Exploded drawing

Schematic diagram

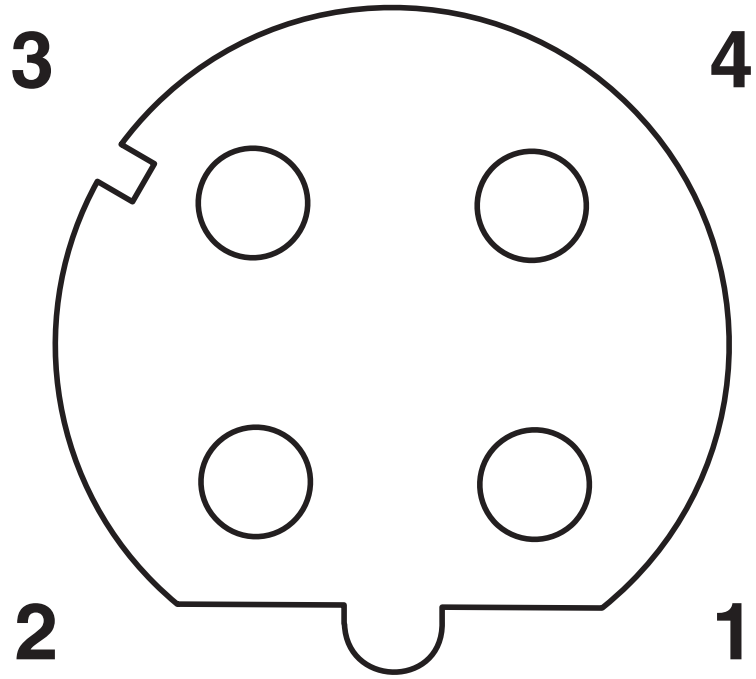

Pin assignment of M12 female, 4-pos., D-coded, view: female side

Schematic diagram

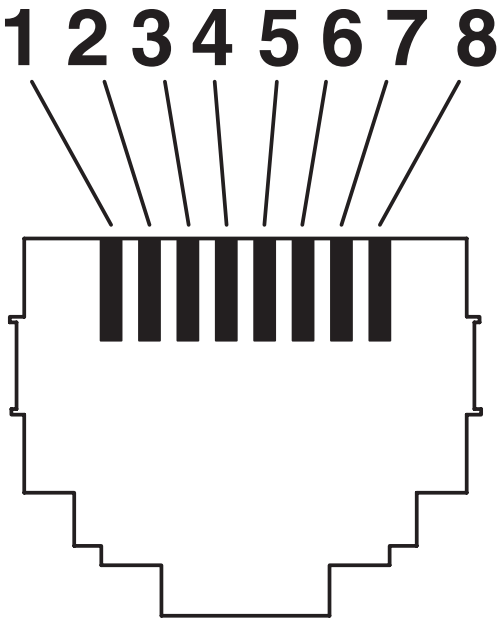

RJ45 jack insert

Circuit diagram

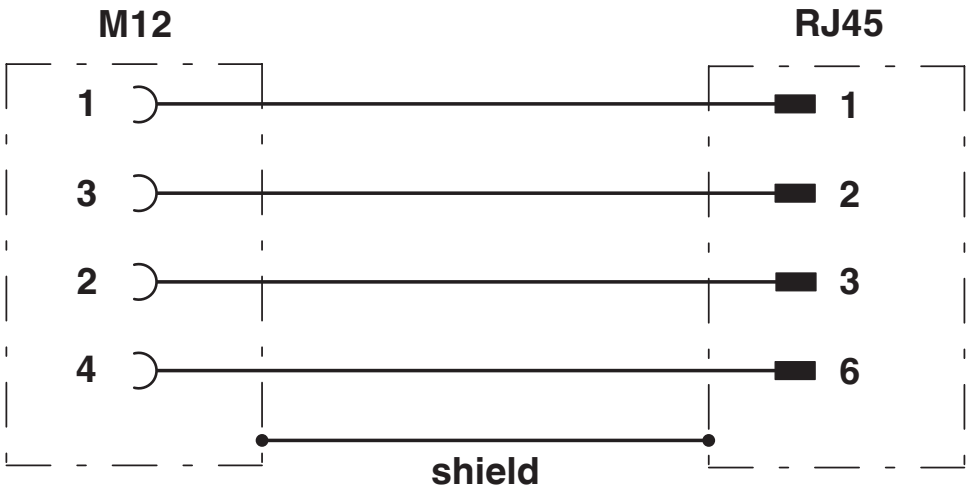

Circuit diagram

Approvals

To download certificates, visit the product detail page: https://www.phoenixcontact.com/us/products/1414397

UL Listed
Approval ID: E335024-20140306

	Nominal voltage U_N	Nominal current I_N	Cross section AWG	Cross section mm^2
keine				
	60 V	0.5 A	-	-

cUL Listed
Approval ID: E335024-20140306

	Nominal voltage U_N	Nominal current I_N	Cross section AWG	Cross section mm^2
keine				
	60 V	0.5 A	-	-

Classifications

ECLASS

ECLASS-13.0	27440390
ECLASS-15.0	27440325

ETIM

ETIM 10.0	EC001134

UNSPSC

UNSPSC 21.0	39121400

Environmental product compliance

EU RoHS

Fulfills EU RoHS substance requirements	Yes
Exemption	6(c)

China RoHS

Environment friendly use period (EFUP)	EFUP-50
	An article-related China RoHS declaration table can be found in the download area for the respective article under "Manufacturer declaration". For all articles with EFUP-E, no China RoHS declaration table issued and required.

EU REACH SVHC

REACH candidate substance (CAS No.)	Lead(CAS: 7439-92-1)
SCIP	88659054-c732-4807-94b1-6ddc1f0dc6bb

EF3.1 Climate Change

CO2e kg	1.491 kg CO2e

Phoenix Contact 2026 © - all rights reserved
https://www.phoenixcontact.com

Phoenix Contact USA
586 Fulling Mill Road
Middletown, PA 17057, United States
(+717) 944-1300
info@phoenixcon.com