CUC-STD-C1PGY-S/R4E8:1 - RJ45 connector

1414382

https://www.phoenixcontact.com/us/products/1414382

Please be informed that the data shown in this PDF document is generated from our online catalog. Please find the complete data in the user documentation. Our general terms of use for downloads are valid.

CRIMP



RJ45 connector, RJ45, Ethernet, CAT6 (1 Gbps), 8-position, connection method: Crimp connection, material: Plastic, connection cross section: AWG 24- 27, degree of protection: IP20

Your advantages

- Reliable 360° shield contact due to the proven crimp connection
- Easy installation with a crimping tool
- Pin insert for V.06 sleeve housing VS-08-T-H-RJ45/IP67

Commercial data

Item number	1414382
Packing unit	1 pc
Minimum order quantity	1 pc
Sales key	AB10
Product key	ABNAAG
GTIN	4055626025339
Weight per piece (including packing)	8 g
Weight per piece (excluding packing)	5.785 g
Customs tariff number	85366990
Country of origin	TW

Technical data

Product properties

Product type	Data connector (cable side)
Type	RJ45
Number of positions	8
Connection profile	RJ45
No. of cable outlets	1
Shielded	no
Cable outlet	straight
Positions/contacts	8P8C

Insulation characteristics

Overvoltage category	I
Degree of pollution	2

Electrical properties

Rated voltage (III/3)	72 V (DC)
Rated current	1 A
Contact resistance	< 20 mΩ (Contact)
	< 100 mΩ (shield)
Frequency range	to 250 MHz
Insulation resistance	> 500 MΩ
Nominal voltage U_N	72 V (DC)
Nominal current I_N	1 A
Contact resistance per contact pair	< 20 Ω
Contact resistance	> 10 mΩ (Wire – IDC)
Transmission medium	Copper
Transmission speed	1 Gbps (250 MHz)
Transmission characteristics (category)	CAT6

Connection data

Connection technology

Connection method	Crimp connection
Connection cross section AWG	24 ... 27 (flexible)
Conductor cross-section	0.11 mm² ... 0.22 mm² (flexible)
Cable outlet, angle	180

Interfaces

Signal type/category	Ethernet CAT6, 1 Gbps (250 MHz)

Dimensions

Width	13.5 mm
Height	17 mm

Length	44.65 mm

Material specifications

Flammability rating according to UL 94	V2
Housing material	Plastic
Contact material	Phosphor bronze
Contact surface material	Au/Ni
Contact carrier material	PC
Locking latch material	PC

Cable/line

External cable diameter	6.6 mm
Cable cross section	0.11 mm²
Test voltage Core/Core	1000 V
Test voltage Core/Shield	1500.00 V

Mechanical properties

Mechanical data

Insertion/withdrawal cycles	≥ 750
Insertion force per signal contact	< 20.00 N
Extraction force per signal contact	< 20 N

Environmental and real-life conditions

Ambient conditions

Degree of protection	IP20
Ambient temperature (operation)	-25 °C ... 60 °C

Mounting

Mounting type	Crimp connection

Drawings

Dimensional drawing

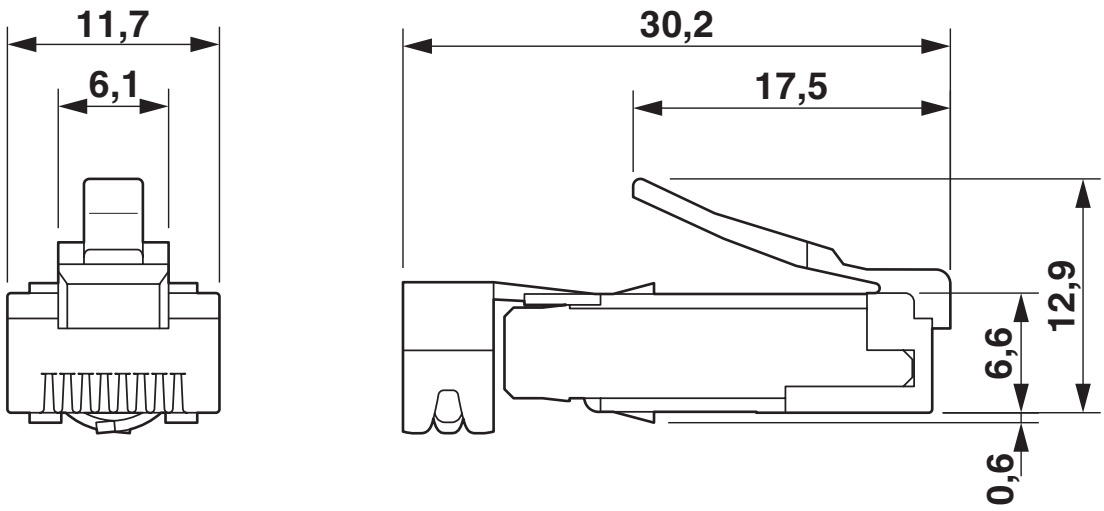

RJ45 male insert

Classifications

ECLASS

ECLASS-13.0	27440114
ECLASS-15.0	27440114

ETIM

ETIM 10.0	EC001121

UNSPSC

UNSPSC 21.0	39121400

Environmental product compliance

EU RoHS

Fulfills EU RoHS substance requirements	Yes, No exemptions

China RoHS

Environment friendly use period (EFUP)	EFUP-E
	No hazardous substances above the limits

EU REACH SVHC

REACH candidate substance (CAS No.)	No substance above 0.1 wt%

EF3.1 Climate Change

CO2e kg	0.251 kg CO2e

Phoenix Contact 2026 © - all rights reserved
https://www.phoenixcontact.com

Phoenix Contact USA
586 Fulling Mill Road
Middletown, PA 17057, United States
(+717) 944-1300
info@phoenixcon.com