HC-STA-B16-HHFS-1STM32-EL-AL - Housing

1412679

https://www.phoenixcontact.com/us/products/1412679

Please be informed that the data shown in this PDF document is generated from our online catalog. Please find the complete data in the user documentation. Our general terms of use for downloads are valid.



Sleeve housing B16, for single locking latch, material: Die-cast aluminum, salt water resistant, cable outlets: 1, lateral, 1x M32, height: 76 mm, cable gland: none, Standard

Your advantages

- Good shielding in the event of electromagnetic interference

Commercial data

Item number	1412679
Packing unit	1 pc
Minimum order quantity	1 pc
Sales key	BF56
Product key	AF7APB
GTIN	4055626059754
Weight per piece (including packing)	226.4 g
Weight per piece (excluding packing)	231.8 g
Customs tariff number	85389099
Country of origin	PL

Technical data

Notes

Notes on the product family	For contact inserts HC-B16, BB32, D40, DD72, HS6, HV6, M, K
Note on application	compatible with module carrier frames with click-in function

Product properties

Product type	Housing with locking latch
Housing type	Sleeve housing
Application	Standard
Type	B16
No. of cable outlets	1
Type of the screw connection	1x M32
Cable outlet	lateral
Pg screw connection	none

Dimensions

Dimensional drawing	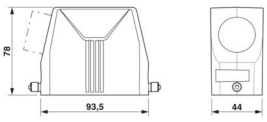
Width	44 mm
Height	76 mm
Length	93.5 mm

Material specifications

Housing material	Die-cast aluminum, salt water resistant
Housing surface material	uncoated

Mechanical properties

Mechanical data

Type of the screw connection	1x M32
Locking type	Pin

Environmental and real-life conditions

Ambient conditions

Degree of protection	IP66
	IP67
Enclosure rating (NEMA)	4 (UL 50e)
	4X (UL 50e)
	12 (UL 50e)
Impact strength	IK08

Ambient temperature (operation)	-40 °C ... 125 °C

Drawings

Dimensional drawing

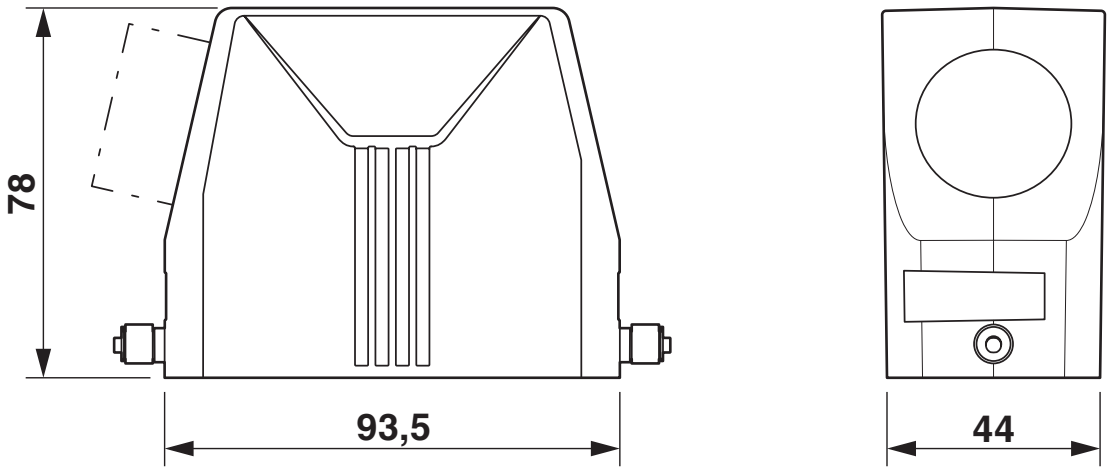

Dimensional drawing

Approvals

To download certificates, visit the product detail page: https://www.phoenixcontact.com/us/products/1412679

DNV
Approval ID: TAE000037S

cUL Recognized
Approval ID: E255026

UL Recognized
Approval ID: E255026

EAC
Approval ID: RU C-DE.AI30.B.01102

Classifications

ECLASS

ECLASS-13.0	27440202
ECLASS-15.0	27440202

ETIM

ETIM 10.0	EC000437

UNSPSC

UNSPSC 21.0	31261500

Environmental product compliance

EU RoHS

Fulfills EU RoHS substance requirements	Yes, No exemptions

China RoHS

Environment friendly use period (EFUP)	EFUP-E
	No hazardous substances above the limits

EU REACH SVHC

REACH candidate substance (CAS No.)	No substance above 0.1 wt%

EF3.1 Climate Change

CO2e kg	4.116 kg CO2e

Phoenix Contact 2026 © - all rights reserved
https://www.phoenixcontact.com

Phoenix Contact USA
586 Fulling Mill Road
Middletown, PA 17057, United States
(+717) 944-1300
info@phoenixcon.com