HC-EVO-B10-HLFD-EL-AL - Housing

1411455

https://www.phoenixcontact.com/us/products/1411455

Please be informed that the data shown in this PDF document is generated from our online catalog. Please find the complete data in the user documentation. Our general terms of use for downloads are valid.



HEAVYCON EVO sleeve housing, EMC version, without powder coating, with bayonet flange for EVO screw connection, B10, for double locking latch, height: 64 mm, without EVO screw connection.

Your advantages

- Flexible cable outlet direction, lateral or straight

Commercial data

Item number	1411455
Packing unit	1 pc
Minimum order quantity	1 pc
Sales key	BF57
Product key	AF7APM
GTIN	4046356932622
Weight per piece (including packing)	146 g
Weight per piece (excluding packing)	140.85 g
Customs tariff number	85389099
Country of origin	DE

Technical data

Notes

General	For contact inserts HC-B10, BB18, DD42, M, K8/24

Product properties

Product type	Housing with locking latch
Housing type	Sleeve housing
Application	Standard
Type	B10
No. of cable outlets	1
Cable outlet	straight
Pg screw connection	none

Dimensions

Dimensional drawing	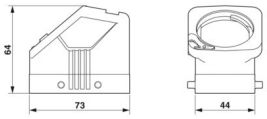
Width	44 mm
Height	64 mm
Length	73 mm

Material specifications

Housing material	Die-cast aluminum, salt water resistant
Housing surface material	uncoated

Mechanical properties

Mechanical data

Locking type	Pin

Mounting

Assembly note	The sleeve base housing must be supplemented with the EVO screw connection. The EVO screw connection is available in 4 sizes. It enables the creation of a straight or a lateral cable outlet. The EVO screw connection is assembled by hand or using a pipe wrench.

Environmental and real-life conditions

Ambient conditions

Degree of protection	IP66
	IP67
	4 (UL 50e)

Enclosure rating (NEMA)	4X (UL 50e)
	12 (UL 50e)
Impact strength	IK09
Ambient temperature (operation)	-40 °C ... 125 °C

Drawings

Dimensional drawing

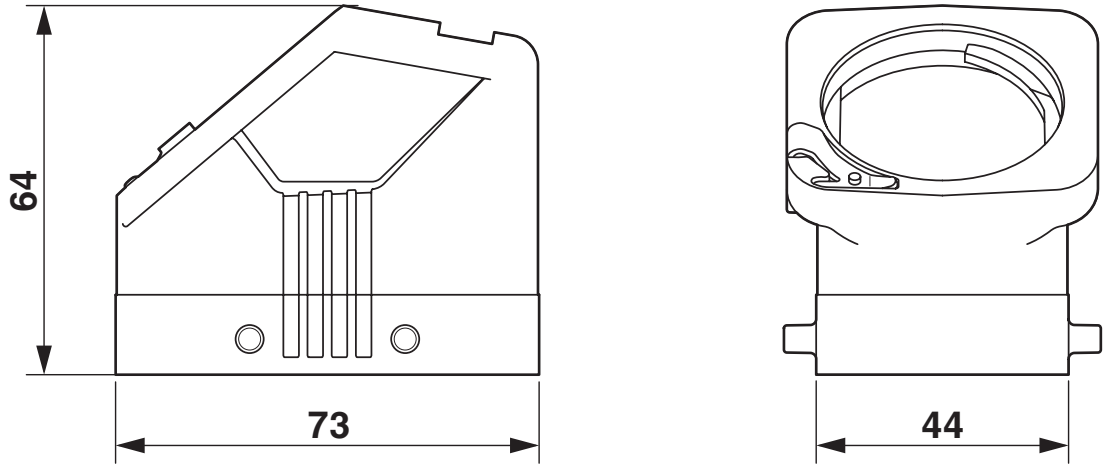

Dimensional drawing

Approvals

To download certificates, visit the product detail page: https://www.phoenixcontact.com/us/products/1411455

DNV
Approval ID: TAE000037S

cUL Recognized
Approval ID: E255026

UL Recognized
Approval ID: E255026

EAC
Approval ID: RU C-DE.AI30.B.01102

Classifications

ECLASS

ECLASS-13.0	27440202
ECLASS-15.0	27440202

ETIM

ETIM 10.0	EC000437

UNSPSC

UNSPSC 21.0	31261500

Environmental product compliance

EU RoHS

Fulfills EU RoHS substance requirements	Yes, No exemptions

China RoHS

Environment friendly use period (EFUP)	EFUP-E
	No hazardous substances above the limits

EU REACH SVHC

REACH candidate substance (CAS No.)	No substance above 0.1 wt%

EF3.1 Climate Change

CO2e kg	1.819 kg CO2e

Phoenix Contact 2026 © - all rights reserved
https://www.phoenixcontact.com

Phoenix Contact USA
586 Fulling Mill Road
Middletown, PA 17057, United States
(+717) 944-1300
info@phoenixcon.com