G-INS-M25-M68N-NNES-S - Cable gland

1411165

https://www.phoenixcontact.com/us/products/1411165

Please be informed that the data shown in this PDF document is generated from our online catalog. Please find the complete data in the user documentation. Our general terms of use for downloads are valid.



Cable gland, material for screw connection: Brass, nickel-plated, application: Standard, external cable diameter 11 mm ... 17 mm, shielding: no, connecting thread: M25 x 1.5, color: silver-colored, with O-ring

Commercial data

Item number	1411165
Packing unit	5 pc
Minimum order quantity	1 pc
Sales key	BF68
Product key	AF7DAX
GTIN	4046356922999
Weight per piece (including packing)	51.46 g
Weight per piece (excluding packing)	49.38 g
Customs tariff number	74198090
Country of origin	TR

Technical data

Mounting

Assembly note	1) Mount screw connection support in the housing using the correct torque 2) Insert cable 3) Tighten union nut using the correct torque

Product properties

Product type	Cable screw gland
Application	Standard
No. of conductors	1
Manufacturer	BIMED
Manufacturer Designation	BMBC-E3
Shielded	no
Execution of the strain relief	A

Characteristics

Category of shock impact	6
Design, Strain relief	A

Dimensions

Dimensional drawing	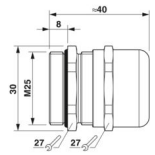
Length	40 mm
Length of the connecting thread	8 mm
Hole diameter	25.1 mm ... 25.3 mm
Wrench size, union nut	27 mm
Wrench size, support	27 mm
Hexagon angular dimension	30 mm
Thread type connection side	M25 x 1.5
Thread pitch	1.5 mm

Connection data

Tightening torque	14 Nm ±1 Nm (Cap nut)
	6 Nm (Support sleeve)

Material specifications

Color	brass color
Material Compression ring	PA 6
Seal material	Perbunan
	CR

Material for screw connection	Brass, nickel-plated

Cable/line

External cable diameter Cable 1	11 mm ... 17 mm
External cable diameter	14 mm ... 17 mm (for UL 514 B)
Halogen-free	no

Environmental and real-life conditions

Ambient conditions

Degree of protection	IP66
	IP68 (5 bar, 30 min.)
	IP69 (DIN EN 60529 / IEC 60529)
Enclosure rating (NEMA)	4X
Ambient temperature (operation)	-40 °C ... 100 °C (static)

Drawings

Dimensional drawing

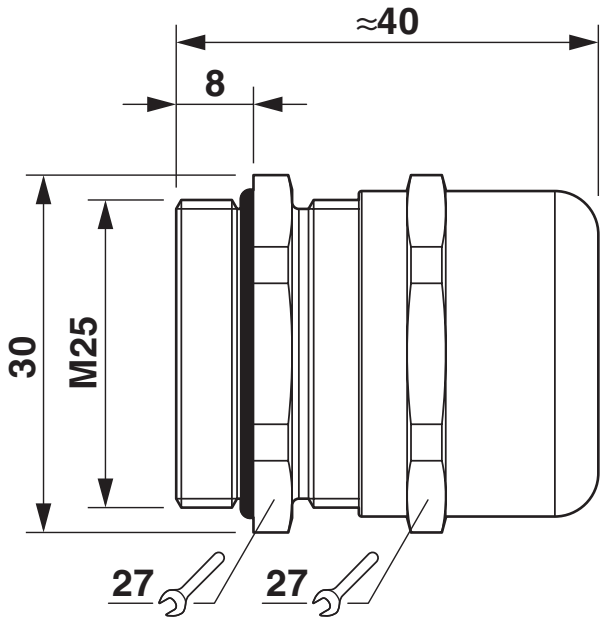

Dimensional drawing

Approvals

To download certificates, visit the product detail page: https://www.phoenixcontact.com/us/products/1411165

DNV
Approval ID: TAE00003WY

UL Listed
Approval ID: E199260

cUL Listed
Approval ID: E199260

Classifications

ECLASS

ECLASS-13.0	27140801
ECLASS-15.0	27140801

ETIM

ETIM 10.0	EC000441

UNSPSC

UNSPSC 21.0	39121300

Environmental product compliance

EU RoHS

Fulfills EU RoHS substance requirements	Yes
Exemption	6(c)

China RoHS

Environment friendly use period (EFUP)	EFUP-50
	An article-related China RoHS declaration table can be found in the download area for the respective article under "Manufacturer declaration". For all articles with EFUP-E, no China RoHS declaration table issued and required.

EU REACH SVHC

REACH candidate substance (CAS No.)	Lead(CAS: 7439-92-1)
SCIP	a3cd6042-8586-469e-bb2f-c538262ee9ed

EF3.1 Climate Change

CO2e kg	0.427 kg CO2e

Phoenix Contact 2026 © - all rights reserved
https://www.phoenixcontact.com

Phoenix Contact USA
586 Fulling Mill Road
Middletown, PA 17057, United States
(+717) 944-1300
info@phoenixcon.com