G-INS-M20-S68N-NNES-S - Cable gland

1411163

https://www.phoenixcontact.com/us/products/1411163

Please be informed that the data shown in this PDF document is generated from our online catalog. Please find the complete data in the user documentation. Our general terms of use for downloads are valid.



Cable gland, material for screw connection: Brass, nickel-plated, application: Standard, external cable diameter 6 mm ... 12 mm, shielding: no, connecting thread: M20 x 1.5, color: silver-colored, with O-ring

Commercial data

Item number	1411163
Packing unit	5 pc
Minimum order quantity	1 pc
Sales key	BF68
Product key	AF7DAX
GTIN	4046356922982
Weight per piece (including packing)	29.2 g
Weight per piece (excluding packing)	29.28 g
Customs tariff number	74198090
Country of origin	TR

Technical data

Mounting

Assembly note	1) Mount screw connection support in the housing using the correct torque 2) Insert cable 3) Tighten union nut using the correct torque

Product properties

Product type	Cable screw gland
Application	Standard
No. of conductors	1
Manufacturer	BIMED
Manufacturer Designation	BMBC-02
Shielded	no
Execution of the strain relief	A

Characteristics

Category of shock impact	6
Design, Strain relief	A

Dimensions

Dimensional drawing	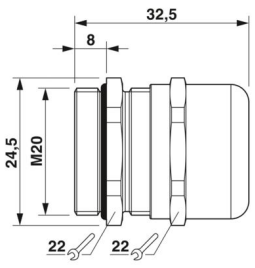
Length	37 mm
Length of the connecting thread	8 mm
Hole diameter	20.1 mm ... 20.3 mm
Wrench size, union nut	22 mm
Wrench size, support	22 mm
Hexagon angular dimension	24.5 mm
Thread type connection side	M20 x 1.5
Thread pitch	1.5 mm

Connection data

Tightening torque	8 Nm ±0.5 Nm (Cap nut)
	5.5 Nm (Support sleeve)

Material specifications

Color	brass color

Material Compression ring	PA 6
Seal material	Perbunan
	CR
Material for screw connection	Brass, nickel-plated

Cable/line

External cable diameter Cable 1	6 mm ... 12 mm
External cable diameter	10 mm ... 12 mm (for UL 514 B)
Halogen-free	no

Environmental and real-life conditions

Ambient conditions

Degree of protection	IP66
	IP68 (5 bar, 30 min.)
	IP69 (DIN EN 60529 / IEC 60529)
Enclosure rating (NEMA)	4X
Ambient temperature (operation)	-40 °C ... 100 °C (static)

Drawings

Dimensional drawing

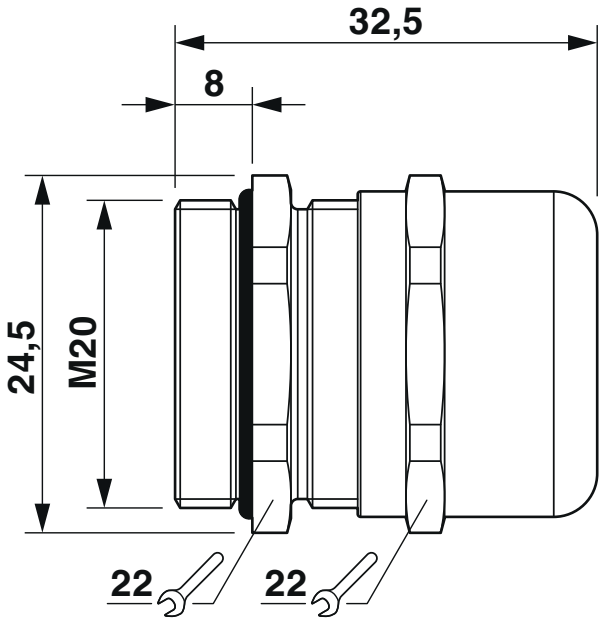

Dimensional drawing

Approvals

To download certificates, visit the product detail page: https://www.phoenixcontact.com/us/products/1411163

DNV
Approval ID: TAE00003WY

UL Listed
Approval ID: E199260

cUL Listed
Approval ID: E199260

Classifications

ECLASS

ECLASS-13.0	27140801
ECLASS-15.0	27140801

ETIM

ETIM 10.0	EC000441

UNSPSC

UNSPSC 21.0	39121300

Environmental product compliance

EU RoHS

Fulfills EU RoHS substance requirements	Yes
Exemption	6(c)

China RoHS

Environment friendly use period (EFUP)	EFUP-50
	An article-related China RoHS declaration table can be found in the download area for the respective article under "Manufacturer declaration". For all articles with EFUP-E, no China RoHS declaration table issued and required.

EU REACH SVHC

REACH candidate substance (CAS No.)	Lead(CAS: 7439-92-1)
SCIP	5a7d5083-b27a-4155-ab7a-3b0d98e0c179

EF3.1 Climate Change

CO2e kg	0.384 kg CO2e

Phoenix Contact 2026 © - all rights reserved
https://www.phoenixcontact.com

Phoenix Contact USA
586 Fulling Mill Road
Middletown, PA 17057, United States
(+717) 944-1300
info@phoenixcon.com