# G-INS-M32-M68N-PNES-BK - Cable gland

1411136

https://www.phoenixcontact.com/us/products/1411136

Please be informed that the data shown in this PDF document is generated from our online catalog. Please find the complete data in the user documentation. Our general terms of use for downloads are valid.



Cable gland, material for screw connection: PA, application: Standard, external cable diameter 15 mm ... 21 mm, shielding: no, connecting thread: M32 x 1.5, color: jet black RAL 9005

## Your advantages

- Plastic material conforms to UL 746C f1

## Commercial data

| | |
|---|---|
| Item number | 1411136 |
| Packing unit | 5 pc |
| Minimum order quantity | 5 pc |
| Sales key | BF68 |
| Product key | AF7DCX |
| GTIN | 4046356922685 |
| Weight per piece (including packing) | 27.1 g |
| Weight per piece (excluding packing) | 26.7 g |
| Customs tariff number | 39269097 |
| Country of origin | TR |

## Technical data

### Mounting

| | |
|---|---|
| Assembly note | 1) Mount screw connection support in the housing using the correct torque 2) Insert cable 3) Tighten union nut using the correct torque |

### Product properties

| | |
|---|---|
| Product type | Cable screw gland |
| Application | Standard |
| No. of conductors | 1 |
| Manufacturer | BIMED |
| Manufacturer Designation | BM-EN-24 |
| Shielded | no |
| Execution of the strain relief | A |

### Characteristics

| | |
|---|---|
| Category of shock impact | 4 |
| Design, Strain relief | A |

### Dimensions

| | |
|---|---|
| Dimensional drawing | 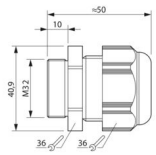  |
| Length | 50 mm |
| Length of the connecting thread | 10 mm |
| Hole diameter | 32.1 mm ... 32.3 mm |
| Wrench size, union nut | 36 mm |
| Wrench size, support | 36 mm |
| Hexagon angular dimension | 40.9 mm |
| Thread type connection side | M32 x 1.5 |
| Thread pitch | 1.5 mm |

### Connection data

| | |
|---|---|
| Tightening torque | 6 Nm ±1 Nm (Cap nut) |
| | 5 Nm (Support sleeve) |

### Material specifications

| | |
|---|---|
| Color | black (RAL 9005) |
| Material Housing | PA (Housing) |
| Flammability rating according to UL 94 | V2 |
| Seal material | CR |

| | |
|---|---|
| Material for screw connection | PA |

## Cable/line

| | |
|---|---|
| External cable diameter Cable 1 | 15 mm ... 21 mm |
| External cable diameter | 16 mm ... 21 mm (for UL 514 B) |
| Halogen-free | no |

## Environmental and real-life conditions

### Ambient conditions

| | |
|---|---|
| Degree of protection | IP66 |
| | IP68 (5 bar / 0.5 h) |
| Enclosure rating (NEMA) | 1 |
| | 4 |
| | 4X |
| | 12 |
| | 13 |
| Ambient temperature (operation) | -40 °C ... 100 °C (static) |

## Drawings

Dimensional drawing

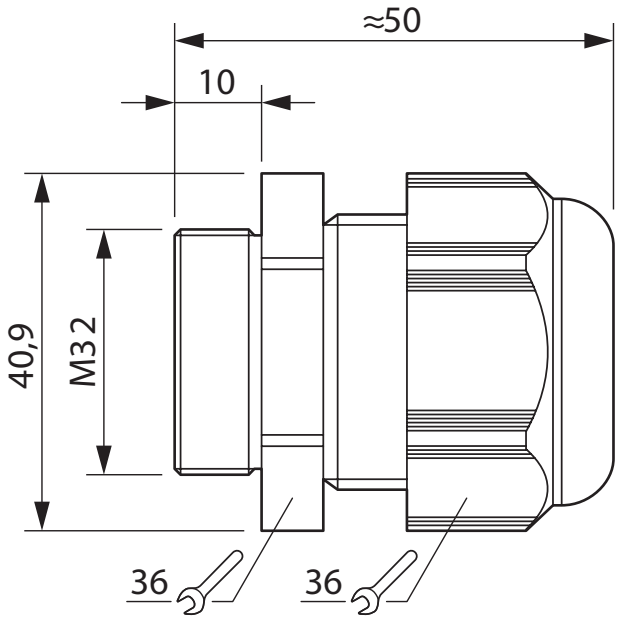


Dimensional drawing

## Approvals

To download certificates, visit the product detail page: https://www.phoenixcontact.com/us/products/1411136

**DNV**
Approval ID: TAE00003WX

**CSA**
Approval ID: 115116

**VDE Zeichengenehmigung**
Approval ID: 40024424

**UL Listed**
Approval ID: E199260

## Classifications

### ECLASS

| | |
|---|---|
| ECLASS-13.0 | 27140801 |
| ECLASS-15.0 | 27140801 |

### ETIM

| | |
|---|---|
| ETIM 10.0 | EC000441 |

### UNSPSC

| | |
|---|---|
| UNSPSC 21.0 | 39121300 |

## Environmental product compliance

EU RoHS

| | |
|---|---|
| Fulfills EU RoHS substance requirements | Yes, No exemptions |

China RoHS

| | |
|---|---|
| Environment friendly use period (EFUP) | EFUP-E |
| | No hazardous substances above the limits |

EU REACH SVHC

| | |
|---|---|
| REACH candidate substance (CAS No.) | No substance above 0.1 wt% |

EF3.1 Climate Change

| | |
|---|---|
| CO2e kg | 0.081 kg CO2e |


Phoenix Contact 2026 © - all rights reserved
https://www.phoenixcontact.com



Phoenix Contact USA
586 Fulling Mill Road
Middletown, PA 17057, United States
(+717) 944-1300
info@phoenixcon.com