CES-B16-8XSRC-BK - Sealing frame

1411073

https://www.phoenixcontact.com/us/products/1411073

Please be informed that the data shown in this PDF document is generated from our online catalog. Please find the complete data in the user documentation. Our general terms of use for downloads are valid.



Sealing frame with screw locking, size: B16, with 8 pre-mounted coned sleeves for a 2 mm ... 11 mm conductor diameter

Commercial data

Item number	1411073
Packing unit	1 pc
Minimum order quantity	1 pc
Sales key	BF67
Product key	AF7CAX
GTIN	4046356921879
Weight per piece (including packing)	219.2 g
Weight per piece (excluding packing)	208 g
Customs tariff number	39269097
Country of origin	PL

Technical data

Product properties

Product type	Frame for cable sleeves
Type	B16
Frame type	Sealing frame with coned sleeves

Connection data

Tightening torque	2 Nm ... 4 Nm (Locking screw)

Dimensions

Dimensional drawing	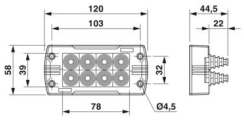
Width	58 mm
Height	20 mm
Length	120 mm
Drill hole distance, horizontal	103 mm
Drill hole distance, vertical	32 mm
Hole diameter	5.5 mm

Installation dimensions

Width of the assembly cutout	35 mm
Length of the assembly cutout	86 mm

Material specifications

Material	PA (Frame)
	NBR (Coned sleeves)

Cable/line

External cable diameter	8x 2 mm ... 11 mm

Characteristics

Number of cable seals	8

Environmental and real-life conditions

Ambient conditions

Degree of protection	IP54
	IP65
Ambient temperature (operation)	-40 °C ... 120 °C (static)

Mounting

Assembly note	M4 locking screw with 3 mm hex socket head, torque 2 ... 4 Nm
	The flat gasket supplied should be inserted between the wall and the sealing frame in the case of panel mounting. IP54: for vertical sealing frame mounting/for horizontal sealing frame mounting (downward cable outlet direction). IP65: vertical mounting/horizontal mounting (downward cable outlet direction) of the sealing frame directly on the housing panel and use of a 3. 6 mm wide cable binder (e.g., item 3240744).

Drawings

Dimensional drawing

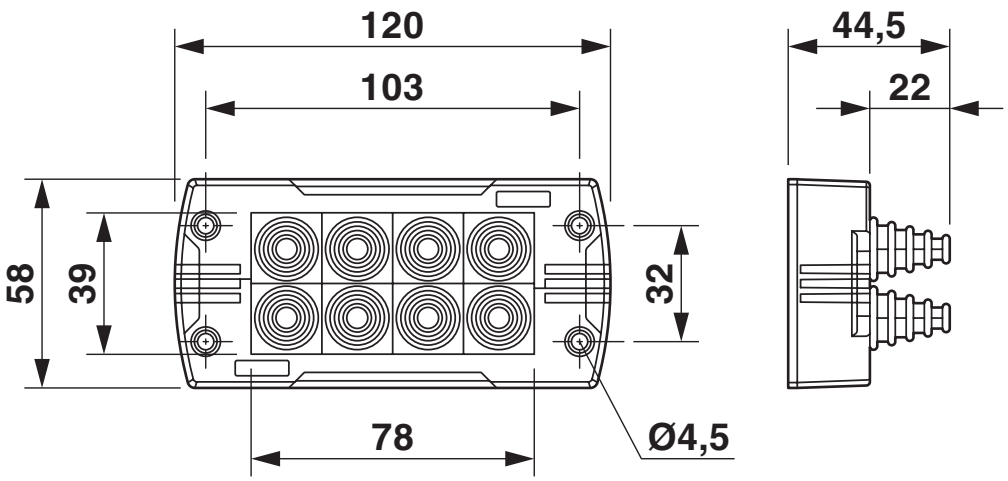

Dimensional drawing

Dimensional drawing

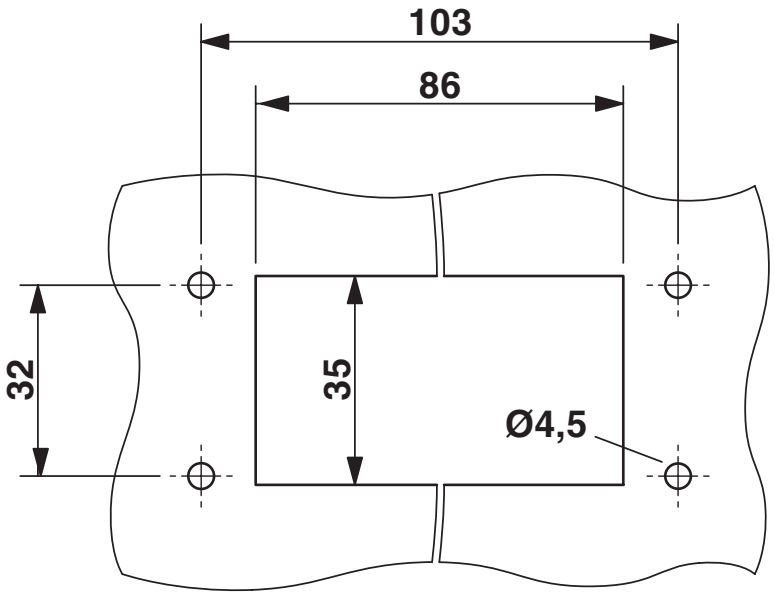

Mounting cutout

Approvals

To download certificates, visit the product detail page: https://www.phoenixcontact.com/us/products/1411073

DNV
Approval ID: TAE00003VJ

Classifications

ECLASS

ECLASS-13.0	23071590
ECLASS-15.0	27182815

ETIM

ETIM 10.0	EC002624

UNSPSC

UNSPSC 21.0	31401600

Environmental product compliance

EU RoHS

Fulfills EU RoHS substance requirements	Yes, No exemptions

China RoHS

Environment friendly use period (EFUP)	EFUP-E
	No hazardous substances above the limits

EU REACH SVHC

REACH candidate substance (CAS No.)	No substance above 0.1 wt%

EF3.1 Climate Change

CO2e kg	1.432 kg CO2e

Phoenix Contact 2026 © - all rights reserved
https://www.phoenixcontact.com

Phoenix Contact USA
586 Fulling Mill Road
Middletown, PA 17057, United States
(+717) 944-1300
info@phoenixcon.com