HC-EVO-B10-BFDC-PLRBK - Housing

1407635

https://www.phoenixcontact.com/us/products/1407635

Please be informed that the data shown in this PDF document is generated from our online catalog. Please find the complete data in the user documentation. Our general terms of use for downloads are valid.



Panel mounting base B10, for double locking latch, material: PA 6.6-FR, protective cover material: PC, height: 30.5 mm, cable gland: none, protective cover: yes, Standard, with flat gasket

Your advantages

- Lower costs than metal version
- Low weight
- Lower risk of condensation

Commercial data

Item number	1407635
Packing unit	1 pc
Minimum order quantity	1 pc
Sales key	BF57
Product key	AF7APL
GTIN	4046356776974
Weight per piece (including packing)	90.5 g
Weight per piece (excluding packing)	90.1 g
Customs tariff number	85389099
Country of origin	PL

Technical data

Notes

Notes on the product family	For contact inserts HC-B10, BB18, DD42, M, K8/24, HV03-I-PT, HC- 3-E...C
Note on application	compatible with module carrier frames with click-in function

Product properties

Product type	Housing with locking latch
Housing type	Panel mounting base
Product family	HC-EVO-B
Application	Standard
Type	B10
Protective cover	yes
Pg screw connection	none

Dimensions

Dimensional drawing	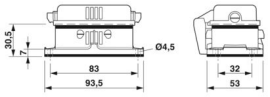
Width	53 mm
Height	30.5 mm
Length	93.5 mm
Hole diameter	4.5 mm

Installation dimensions

Width of the assembly cutout	35 mm
Length of the assembly cutout	65 mm

Material specifications

Flammability rating according to UL 94	V0 (Housing)
	V0 (Protective cover)
Seal material	NBR (profile gasket)
	NBR (Flat gasket)
Housing material	PA 6.6-FR
Material, protective cover	PC

Mechanical properties

Mechanical data

Locking type	Pin

Connection data

Tightening torque	0.8 Nm ... 1.2 Nm (For M4 mounting screws on the panel-mount

	base)

Mounting

Assembly note	Not for D series terminal adapters
	Not for HC-B 24-ADP-B..... adapter plates

Environmental and real-life conditions

Ambient conditions

Degree of protection	IP66 (when plugged in)
	IP54 (with closed protective cover)
Enclosure rating (NEMA)	12 (UL 50e)
Impact strength	IK09
Ambient temperature (operation)	-40 °C ... 125 °C

Drawings

Dimensional drawing

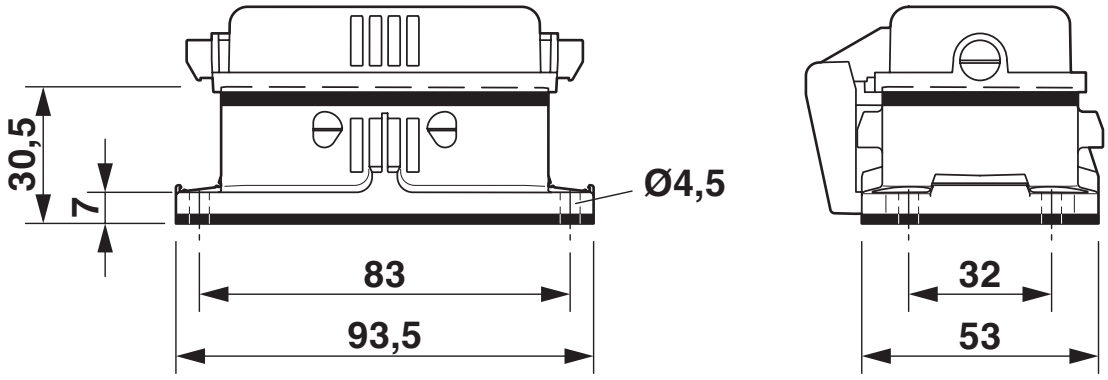

Dimensional drawing

Dimensional drawing

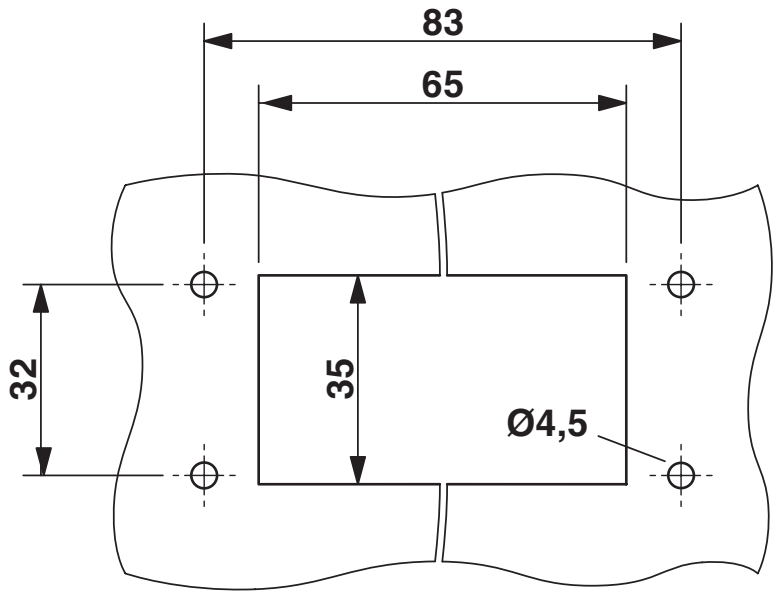

Mounting cutout

Approvals

To download certificates, visit the product detail page: https://www.phoenixcontact.com/us/products/1407635

DNV
Approval ID: TAE000037S

EAC
Approval ID: RU C-DE.AI30.B.01102

cUL Recognized
Approval ID: E255026

UL Recognized
Approval ID: E255026

Classifications

ECLASS

ECLASS-13.0	27440202
ECLASS-15.0	27440202

ETIM

ETIM 10.0	EC000437

UNSPSC

UNSPSC 21.0	31261500

Environmental product compliance

EU RoHS

Fulfills EU RoHS substance requirements	Yes, No exemptions

China RoHS

Environment friendly use period (EFUP)	EFUP-E
	No hazardous substances above the limits

EU REACH SVHC

REACH candidate substance (CAS No.)	No substance above 0.1 wt%

Phoenix Contact 2026 © - all rights reserved
https://www.phoenixcontact.com

Phoenix Contact USA
586 Fulling Mill Road
Middletown, PA 17057, United States
(+717) 944-1300
info@phoenixcon.com