# HC-EVO-B10-HLFS-PLBK - Housing

1407626

https://www.phoenixcontact.com/us/products/1407626

Please be informed that the data shown in this PDF document is generated from our online catalog. Please find the complete data in the user documentation. Our general terms of use for downloads are valid.



HEAVYCON EVO sleeve housing, plastic, with bayonet flange for EVO screw connection, B10, for single locking latch, height: 60.5 mm, without EVO screw connection

## Your advantages

- Flexible cable outlet direction, lateral or straight
- Lower costs than metal version
- Low weight
- Lower risk of condensation

## Commercial data

| | |
|---|---|
| Item number | 1407626 |
| Packing unit | 1 pc |
| Minimum order quantity | 1 pc |
| Sales key | BF57 |
| Product key | AF7APL |
| GTIN | 4046356776882 |
| Weight per piece (including packing) | 69.3 g |
| Weight per piece (excluding packing) | 70 g |
| Customs tariff number | 85389099 |
| Country of origin | PL |

## Technical data

### Notes

| | |
|---|---|
| General | For contact inserts HC-B10, BB18, DD42, M, K8/24, HV03-I-PT, HC- 3-E...C |

### Product properties

| | |
|---|---|
| Product type | Housing with locking latch |
| Housing type | Sleeve housing |
| Product family | HC-EVO-B |
| Application | Standard |
| Type | B10 |
| No. of cable outlets | 1 |
| Cable outlet | straight |
| Pg screw connection | none |

### Dimensions

| | |
|---|---|
| Dimensional drawing | 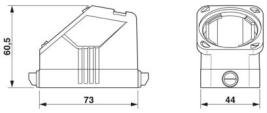 |
| Width | 44 mm |
| Height | 60.5 mm |
| Length | 73 mm |

### Material specifications

| | |
|---|---|
| Flammability rating according to UL 94 | V0 (Housing) |
| Housing material | PA 6.6-FR |

### Mechanical properties

Mechanical data

| | |
|---|---|
| Locking type | Pin |

### Mounting

| | |
|---|---|
| Assembly note | The sleeve base housing must be supplemented with the EVO screw connection. The EVO screw connection is available in four sizes. It facilitates the creation of a straight or a side cable outlet. The EVO screw connection is mounted with the aid of, for example, a pipe wrench |

### Environmental and real-life conditions

Ambient conditions

| | |
|---|---|
| Degree of protection | IP66 |
| Enclosure rating (NEMA) | 12 (UL 50e) |

| | |
|---|---|
| Impact strength | IK08 |
| Ambient temperature (operation) | -40 °C ... 125 °C |

## Drawings

Dimensional drawing

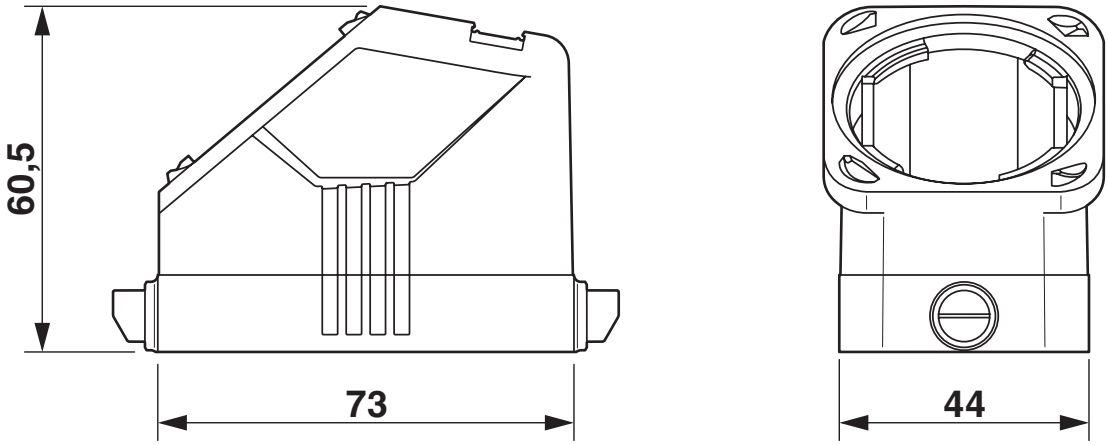


Dimensional drawing

## Approvals

To download certificates, visit the product detail page: https://www.phoenixcontact.com/us/products/1407626

**DNV**
Approval ID: TAE000037S

**cUL Recognized**
Approval ID: E255026

**UL Recognized**
Approval ID: E255026

**EAC**
Approval ID: RU C-DE.AI30.B.01102

## Classifications

### ECLASS

| | |
|---|---|
| ECLASS-13.0 | 27440202 |
| ECLASS-15.0 | 27440202 |

### ETIM

| | |
|---|---|
| ETIM 10.0 | EC000437 |

### UNSPSC

| | |
|---|---|
| UNSPSC 21.0 | 31261500 |

## Environmental product compliance

EU RoHS

| | |
|---|---|
| Fulfills EU RoHS substance requirements | Yes, No exemptions |

China RoHS

| | |
|---|---|
| Environment friendly use period (EFUP) | EFUP-E |
| | No hazardous substances above the limits |

EU REACH SVHC

| | |
|---|---|
| REACH candidate substance (CAS No.) | No substance above 0.1 wt% |


Phoenix Contact 2026 © - all rights reserved
https://www.phoenixcontact.com



Phoenix Contact USA
586 Fulling Mill Road
Middletown, PA 17057, United States
(+717) 944-1300
info@phoenixcon.com