NBC-M12MSX/ 5,0-94F/R4AC - Network cable

1407473

https://www.phoenixcontact.com/us/products/1407473

Please be informed that the data shown in this PDF document is generated from our online catalog. Please find the complete data in the user documentation. Our general terms of use for downloads are valid.

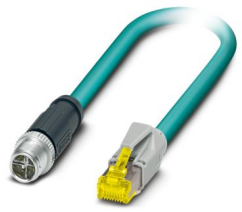

Network cable, Ethernet CAT6$_A$ (10 Gbps), CC-Link IE CAT6$_A$ (10 Gbps), 8-position, PUR halogen-free, water blue RAL 5021, shielded (Advanced Shielding Technology), Plug straight M12, coding: X / IP67, on Plug straight RJ45 / IP20, cable length: 5 m

Commercial data

Item number	1407473
Packing unit	1 pc
Minimum order quantity	1 pc
Sales key	BF04
Product key	AF1CMJ
GTIN	4046356776714
Weight per piece (including packing)	261 g
Weight per piece (excluding packing)	243.8 g
Customs tariff number	85444290
Country of origin	US

Technical data

Notes

General	Further products with variable cable type and variable cable length can be found in the accessories section

Product properties

Product type	Data cable preassembled
Application	Standard
Number of positions	8
Shielded	yes
Coding	X

Interfaces

Bus system	Ethernet
Signal type/category	Ethernet $CAT6_A$, 10 Gbps
	CC-Link IE $CAT6_A$, 10 Gbps

Signaling

Status display	no
Status display present	no

Electrical properties

Nominal voltage U_N	48 V AC
	60 V DC
Nominal current I_N	0.5 A
Transmission medium	Copper
Transmission speed	10 Gbps
Transmission characteristics (category)	$CAT6_A$

Connector

Connection 1

Dimensional drawing	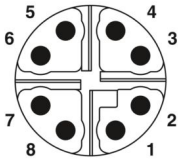 Pin assignment of M12 plug, 8-pos., X-coded, pin side view
Type	M12 Plug, straight, 8-position, shielded (Advanced Shielding Technology), Keying: X, Ethernet, CC-Link IE
Number of positions	8
Shielded	yes
Shielding	Advanced Shielding Technology

Signal type/category	Ethernet CAT6$_A$, 10 Gbps
	CC-Link IE CAT6$_A$, 10 Gbps
Insertion/withdrawal cycles	≥ 100
Insulation resistance	≥ 100 Ω
Overvoltage category	II
Degree of pollution	3
Tightening torque	0.4 Nm (M12 connector)
Material Contact	CuZn
Material Contact surface	Ni/Au
Material Contact carrier	PA 6.6
Material Screw connection	Die-cast zinc, nickel-plated
Material Grip body	TPU, hardly inflammable, self-extinguishing
Material Seal	FKM
Flammability rating according to UL 94	V0
Degree of protection	IP65
	IP67
Ambient temperature (operation)	-25 °C ... 85 °C
Standard designation	M12 connector
Standards/regulations	IEC 61076-2-109

Connection 2

Dimensional drawing	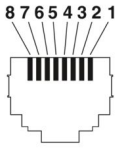 Connector pin assignment plug RJ45
Type	RJ45 Plug, straight, 8-position, Ethernet, CC-Link IE
Number of positions	8
Signal type/category	Ethernet CAT6$_A$, 10 Gbps
	CC-Link IE CAT6$_A$, 10 Gbps
Insertion/withdrawal cycles	≥ 750
Insulation resistance	≥ 100 Ω
Overvoltage category	I
Degree of pollution	2
Material Contact	CuSn
Material Contact surface	Ni/Au
Material Contact carrier	PC
Material Housing	PA
Color (Housing)	gray
Flammability rating according to UL 94	V2

Degree of protection	IP20 (RJ45 connector)
Ambient temperature (operation)	-25 °C ... 60 °C

Cable/line

Cable length	5 m

Ethernet 10 Gbit [94F]

Dimensional drawing	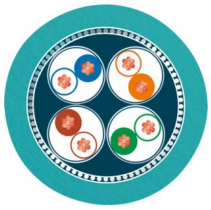
UL AWM Style	21238 (80 °C / 600 V)
Number of positions	8
Shielded	yes
Cable type	Ethernet 10 Gbit [94F]
Conductor structure	4x2xAWG26/7; S/FTP
AWG signal line	26
Conductor cross-section	4x 2x 0.14 mm²
Wire diameter incl. insulation	1 mm ±0.05 mm
External cable diameter	6.40 mm ±0.2 mm
Outer sheath, material	PUR
External sheath, color	water blue RAL 5021
Conductor material	Bare Cu litz wires
Material wire insulation	Foamed PE
Single wire, color	white/blue-blue, white/orange-orange, white/green-green, white/brown-brown
Twisted pairs	2 cores to the pair
Overall twist	4 pairs for core
Optical shield covering	70 %
Insulation resistance	≥ 500 MΩ*km
Loop resistance	≤ 290.00 Ω/km
Wave impedance	100 Ω ±5 Ω (at 100 MHz)
Nominal voltage, cable	≤ 100 V
Test voltage Core/Core	2000 V (50 Hz, 1 min.)
Test voltage Core/Shield	2000.00 V (50 Hz, 1 min.)
Minimum bending radius, fixed installation	4 x D
Minimum bending radius, flexible installation	8 x D
Smallest bending radius, fixed installation	26 mm
Smallest bending radius, movable installation	51 mm
Halogen-free	according to IEC 60754-1

Flame resistance	according to IEC 60332-1-2
	in accordance with UN ECE-R 118.03
	according to CSA C 22.2 No. 210-FT1
Resistance to oil	in accordance with DIN EN 60811-404
Ambient temperature (operation)	-40 °C ... 80 °C (cable, fixed installation)
	-20 °C ... 80 °C (Cable, flexible installation)

Environmental and real-life conditions

Ambient conditions

Degree of protection	IP65 (M12 connector)
	IP67 (M12 connector)
	IP20 (RJ45 connector)

Standards and regulations

M12

Standard designation	M12 connector
Standards/specifications	IEC 61076-2-109

Drawings

Dimensional drawing

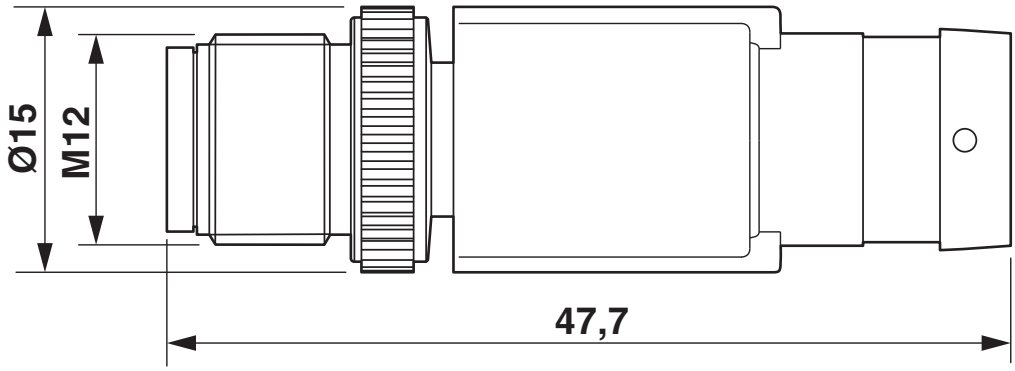

Plug, M12 x 1, straight, shielded

Dimensional drawing

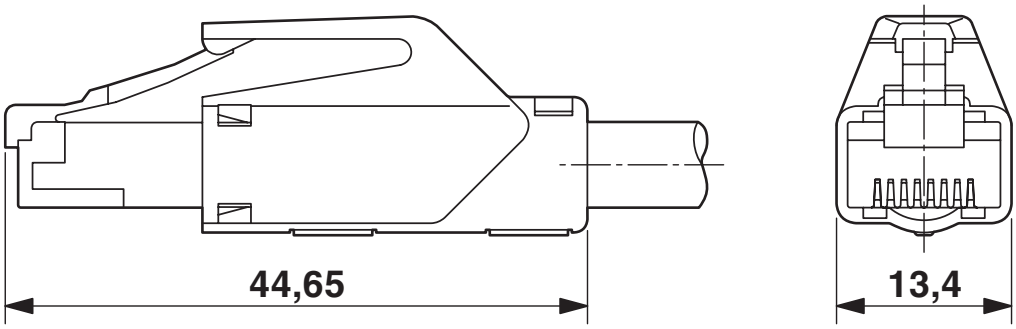

RJ45 connector, IP20

Schematic diagram

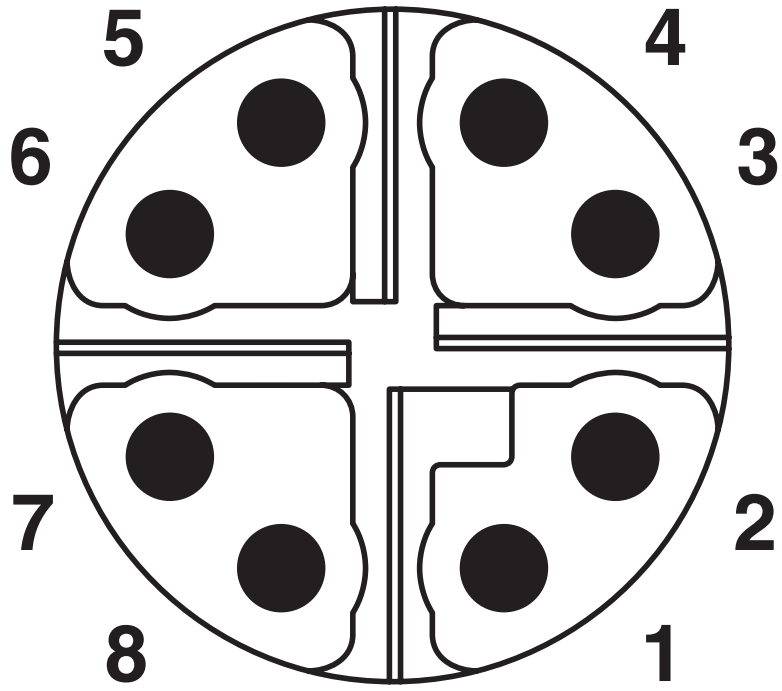

Pin assignment of M12 plug, 8-pos., X-coded, pin side view

Schematic diagram

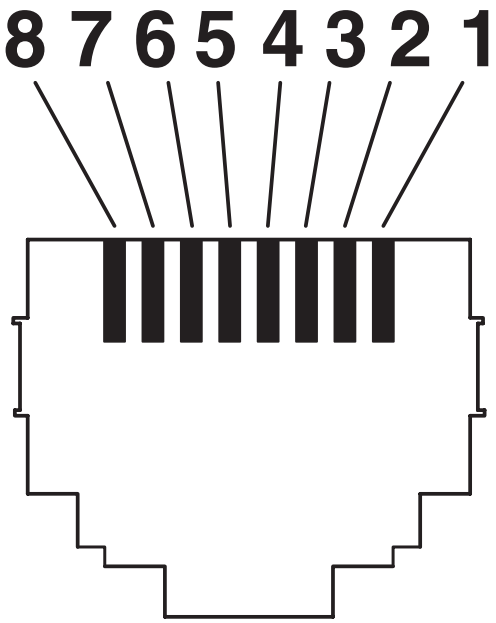

Connector pin assignment plug RJ45

Circuit diagram

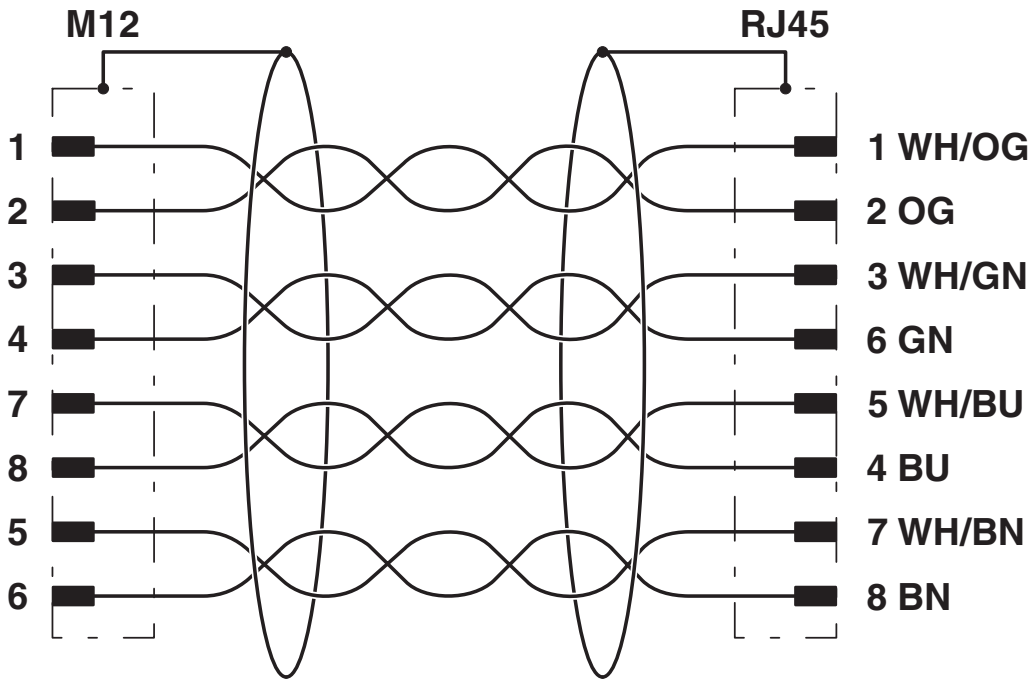

Contact assignment of the M12 and RJ45 plug

Approvals

To download certificates, visit the product detail page: https://www.phoenixcontact.com/us/products/1407473

UL Listed
Approval ID: FILE E 335024

	Nominal voltage U_N	Nominal current I_N	Cross section AWG	Cross section mm^2
keine				
	30 V	0.5 A	-	-

cUL Listed
Approval ID: FILE E 335024

	Nominal voltage U_N	Nominal current I_N	Cross section AWG	Cross section mm^2
keine				
	30 V	0.5 A	-	-

EAC-RoHS
Approval ID: RU D-DE.HB35.B.00387

Classifications

ECLASS

ECLASS-13.0	27060307
ECLASS-15.0	27060307

ETIM

ETIM 10.0	EC002599

UNSPSC

UNSPSC 21.0	26121600

Environmental product compliance

EU RoHS

Fulfills EU RoHS substance requirements	Yes, No exemptions

China RoHS

Environment friendly use period (EFUP)	EFUP-E
	No hazardous substances above the limits

EU REACH SVHC

REACH candidate substance (CAS No.)	No substance above 0.1 wt%

EF3.1 Climate Change

CO2e kg	16.433 kg CO2e

Phoenix Contact 2026 © - all rights reserved
https://www.phoenixcontact.com

Phoenix Contact USA
586 Fulling Mill Road
Middletown, PA 17057, United States
(+717) 944-1300
info@phoenixcon.com