HC-Q05-I-CT-M - Contact insert

1406538

https://www.phoenixcontact.com/us/products/1406538

Please be informed that the data shown in this PDF document is generated from our online catalog. Please find the complete data in the user documentation. Our general terms of use for downloads are valid.



Contact insert, number of positions: 5+PE, size: D7, number of connections per position: 1, Pin, Crimp connection, 230 V/400 V, 20 A, 0.5 mm^2 ... 2.5 mm^2, application: Power

Your advantages

- Shock and vibration-resistant in accordance with DIN EN 61373

Commercial data

Item number	1406538
Packing unit	1 pc
Minimum order quantity	1 pc
Sales key	BF61
Product key	AF7ABJ
GTIN	4046356932363
Weight per piece (including packing)	15 g
Weight per piece (excluding packing)	14.7 g
Customs tariff number	85366990
Country of origin	CN

Technical data

Notes

General	for HC-D7 housing, CK2,5-ED crimp contacts (crimp contacts not included in scope of supply)
General	Connectors may be operated only when there is no load/voltage.

Mounting

Assembly note	To ensure correct use, installation in housing with IP54 protection or better is required

Product properties

Product type	Contact insert with a fixed no. of positions
Series	HC-Q
Application	Power
Type	D7
Number of positions	5
Connection profile	5+PE
Contact numbering	1 - 5
Number of connections per position	1
Contact material type	turned

Insulation characteristics

Overvoltage category	III
Degree of pollution	3

Dimensions

Dimensional drawing	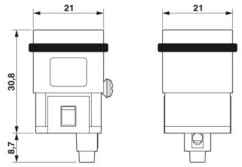
Width	21 mm
Height	39.5 mm
Length	21 mm

Mechanical characteristics

Contact diameter	2.5 mm

Connection data

Connection technology

Connection technology	Crimp connection
Number of connections per position	1
Connection in acc. with standard	IEC / EN

Conductor connection

Conductor cross-section	0.5 mm² ... 2.5 mm² (The cross section specification refers to the geometric cross section of the cable used)
Connection cross section AWG	20 ... 14
Connection cross section PE contact	0.5 mm² ... 2.5 mm²
Connection cross section PE contact AWG	20 ... 14
Tightening torque	0.5 Nm ... 0.8 Nm (Mounting screws for mounting in the HEAVYCON housing)
Stripping length of the individual wire	7.5 mm

Electrical properties

Rated voltage (III/3)	230 V (Conductor-PE)
	400 V (Conductor-Conductor)
Rated voltage for power contacts	230/400 V
Rated surge voltage	4 kV
Rated current	20 A (power contacts)

Mechanical properties

Mechanical data

Insertion/withdrawal cycles	≥ 500

Material specifications

Flammability rating according to UL 94	V0
Seal material	NBR, conductive
Contact material	Copper alloy
Contact surface material	Ag (alternatively Au)
Contact carrier material	PC

Environmental and real-life conditions

Ambient conditions

Ambient temperature (operation)	-40 °C ... 125 °C (including heating up of contacts)

Standards and regulations

Standards/regulations	PC: Fire protection in rail vehicles - requirement sets R22, R23, and R24 acc. to DIN EN 45545-2 (Risk level HL1 - HL3)

Drawings

Dimensional drawing

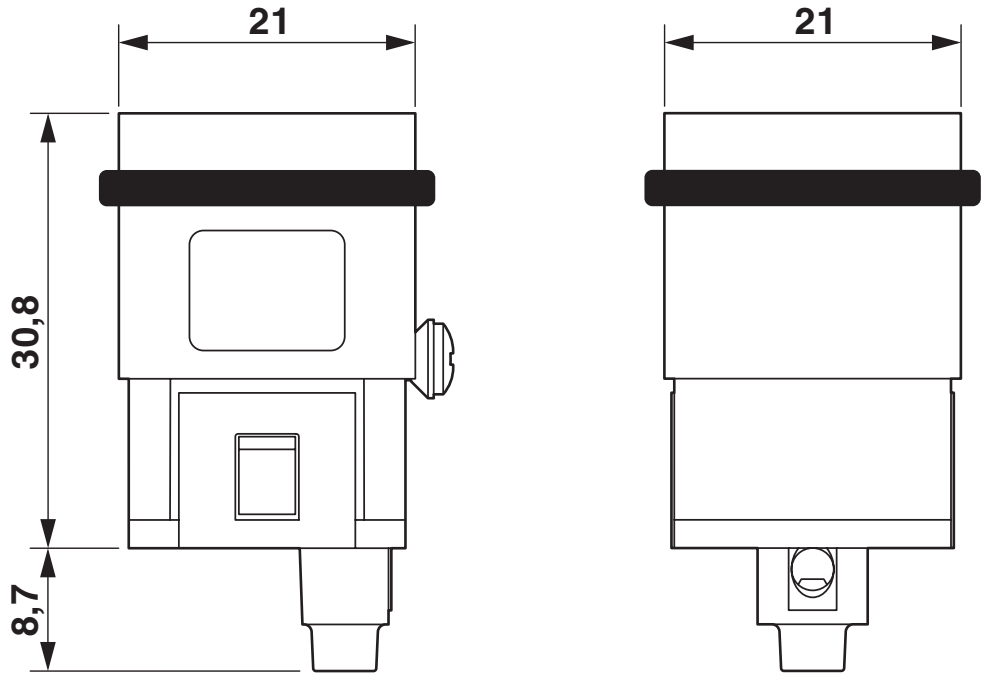

Male insert

Schematic diagram

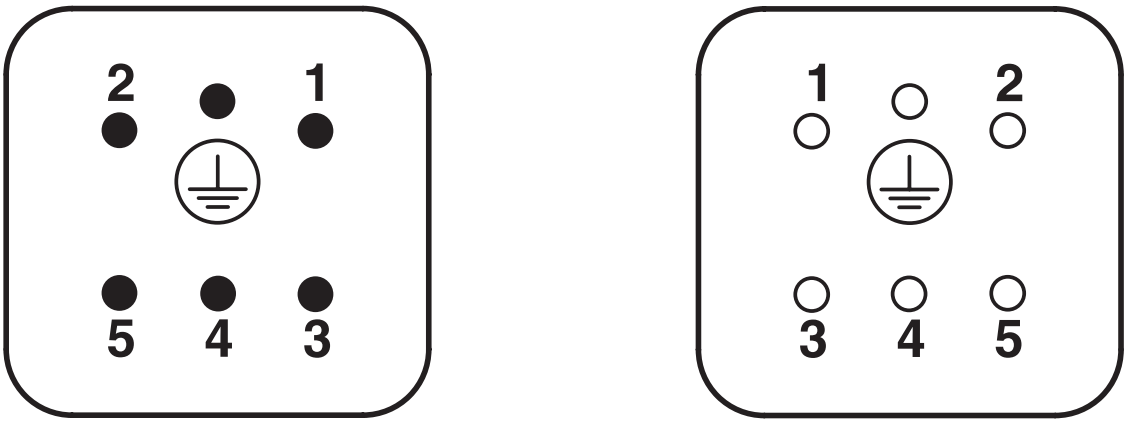

Contact-side pin assignment

Diagram

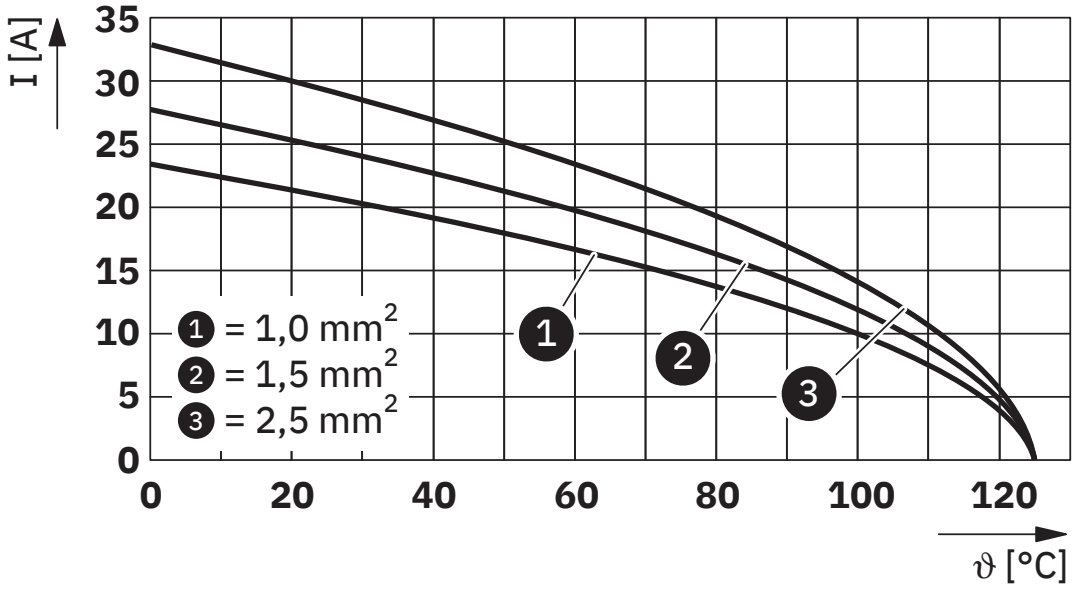

Derating diagram

Approvals

To download certificates, visit the product detail page: https://www.phoenixcontact.com/us/products/1406538

DNV
Approval ID: TAE000037S

CSA
Approval ID: 013631_0_000

	Nominal voltage U_N	Nominal current I_N	Cross section AWG	Cross section mm^2
keine				
	600 V	15 A	- 14	-

UL Recognized
Approval ID: E468743

	Nominal voltage U_N	Nominal current I_N	Cross section AWG	Cross section mm^2
keine				
	600 V	24 A	- 14	-

UL Recognized
Approval ID: E118976

	Nominal voltage U_N	Nominal current I_N	Cross section AWG	Cross section mm^2
keine				
	600 V	24 A	-	-

Classifications

ECLASS

ECLASS-13.0	27440205
ECLASS-15.0	27440205

ETIM

ETIM 10.0	EC000438

UNSPSC

UNSPSC 21.0	39121500

Environmental product compliance

EU RoHS

Fulfills EU RoHS substance requirements	Yes, No exemptions

China RoHS

Environment friendly use period (EFUP)	EFUP-E
	No hazardous substances above the limits

EU REACH SVHC

REACH candidate substance (CAS No.)	No substance above 0.1 wt%

Phoenix Contact 2026 © - all rights reserved
https://www.phoenixcontact.com

Phoenix Contact USA
586 Fulling Mill Road
Middletown, PA 17057, United States
(+717) 944-1300
info@phoenixcon.com