SAC-ASI-J-Y-Y-N - Distributor

1405622

https://www.phoenixcontact.com/us/products/1405622

Please be informed that the data shown in this PDF document is generated from our online catalog. Please find the complete data in the user documentation. Our general terms of use for downloads are valid.



AS-Interface H distributor with a high degree of protection, parallel wired, for the distribution of AS-Interface flat-ribbon conductors

Commercial data

Item number	1405622
Packing unit	1 pc
Minimum order quantity	1 pc
Sales key	BF10
Product key	AF1GFA
GTIN	4046356754934
Weight per piece (including packing)	41 g
Weight per piece (excluding packing)	39.5 g
Customs tariff number	85366990
Country of origin	VN

Technical data

Product properties

Product type	Network distributor box
Number of positions	4

Insulation characteristics

Overvoltage category	III
Degree of pollution	3

Electrical properties

Nominal voltage U_N	≤ 32 V DC
Nominal current I_N	8 A
Transmission medium	Copper

Connection data

Connection technology

Connection method	AS-i penetration technique

Interfaces

Signal type/category	CANopen®
	DeviceNet™

Signaling

Status display	no
Status display present	no

Material specifications

Material Housing	PBT

Connector

Connection 1

Type	Load center AS-i Screw locking
Number of positions	4
Locking type	Screw locking mechanism
Material	CuSn (Contact)
	Ni/Au (Contact surface)
	PBT (Contact carrier)
	PBT (Housing)
	Stainless steel (Screw connection)
Tightening torque	1.65 Nm (Locking screw)

Environmental and real-life conditions

Ambient conditions

Degree of protection	IP65
	IP67
	IP69K
Ambient temperature (operation) (male connector/female connector)	-25 °C ... 75 °C
Ambient temperature (storage/transport)	-25 °C ... 85 °C

Drawings

Dimensional drawing

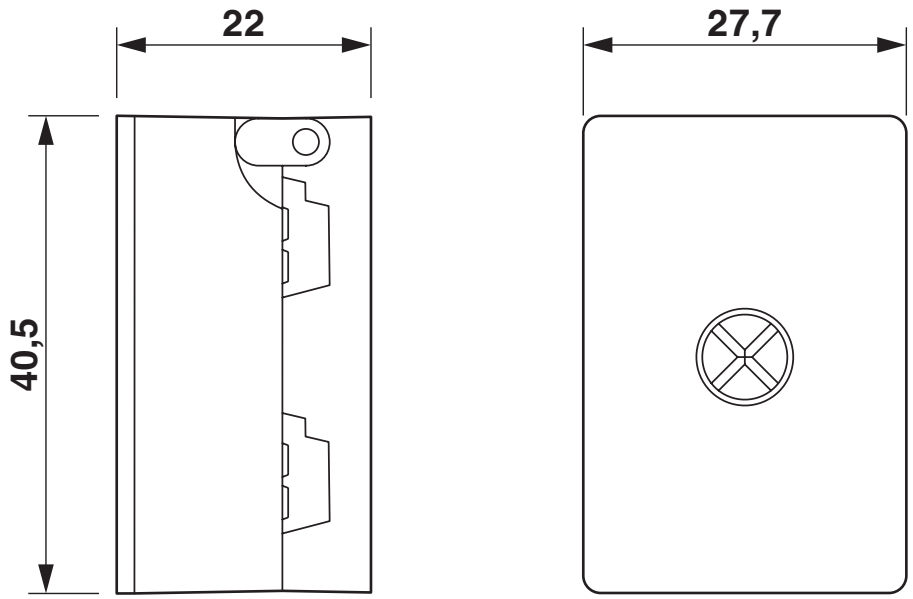

Distributor, AS-Interface

Dimensional drawing

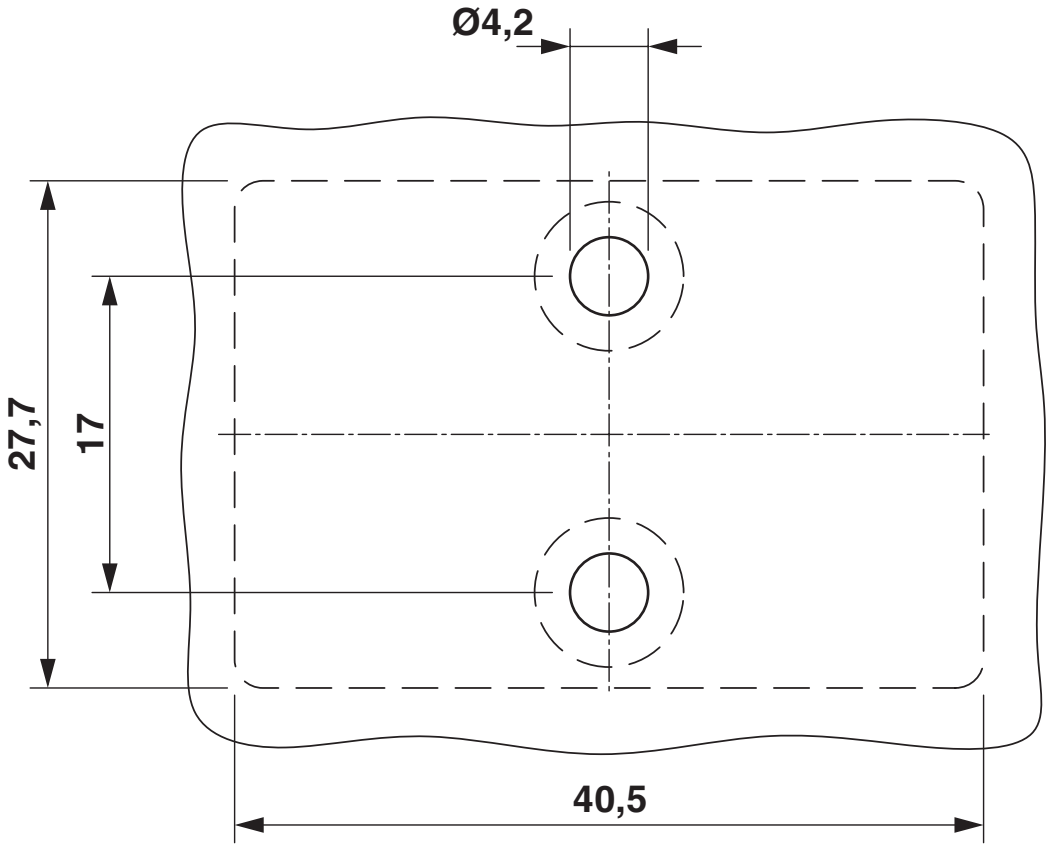

Distance and position of the mounting holes

Circuit diagram



Contact assignment of the AS-Interface distributor

Classifications

ECLASS

ECLASS-13.0	27440106
ECLASS-15.0	27440106

ETIM

ETIM 10.0	EC002925

UNSPSC

UNSPSC 21.0	31251500

Environmental product compliance

EU RoHS

Fulfills EU RoHS substance requirements	Yes, No exemptions

China RoHS

Environment friendly use period (EFUP)	EFUP-E
	No hazardous substances above the limits

EU REACH SVHC

REACH candidate substance (CAS No.)	No substance above 0.1 wt%

EF3.1 Climate Change

CO2e kg	2.378 kg CO2e

Phoenix Contact 2026 © - all rights reserved
https://www.phoenixcontact.com

Phoenix Contact USA
586 Fulling Mill Road
Middletown, PA 17057, United States
(+717) 944-1300
info@phoenixcon.com