EV-T2SF - Panel-mount frame

1405218

https://www.phoenixcontact.com/us/products/1405218

Please be informed that the data shown in this PDF document is generated from our online catalog. Please find the complete data in the user documentation. Our general terms of use for downloads are valid.



CHARX connect basic, Type 2, Panel-mount frame, Accessories, Front mounting, M5 thread, housing: black, for attachment to infrastructure charging sockets, Without logo, IEC 62196-2

Product description

Panel mounting frame for Socket Outlet

Your advantages

- Developed and produced in accordance with the IATF 16949 automotive standard and ISO 9001
- Individual branding, thanks to the use your own logo

Commercial data

Item number	1405218
Packing unit	1 pc
Minimum order quantity	1 pc
Sales key	EM01
Product key	XWBFAC
GTIN	4046356738514
Weight per piece (including packing)	62.5 g
Weight per piece (excluding packing)	58.4 g
Customs tariff number	39269097
Country of origin	DE

Technical data

Product properties

Product type	Panel mounting frame for Socket Outlet
Product family	CHARX connect basic
Type	Accessories
Charging standard	Type 2
Charging mode	Mode 3, Case B
Affixed logo	Without logo
Customer variations	On request

Material specifications

Color (Housing)	black (9005)
Material (Housing)	Plastic

Environmental and real-life conditions

Ambient conditions

Ambient temperature (operation)	-30 °C ... 50 °C
Ambient temperature (storage/transport)	-40 °C ... 80 °C

Standards and regulations

Standards

Standards/regulations	IEC 62196-2

Mounting

Mounting type Protective cover	Front mounting (rear screw connection)
Fixing screws	M5 thread

Drawings

Dimensional drawing

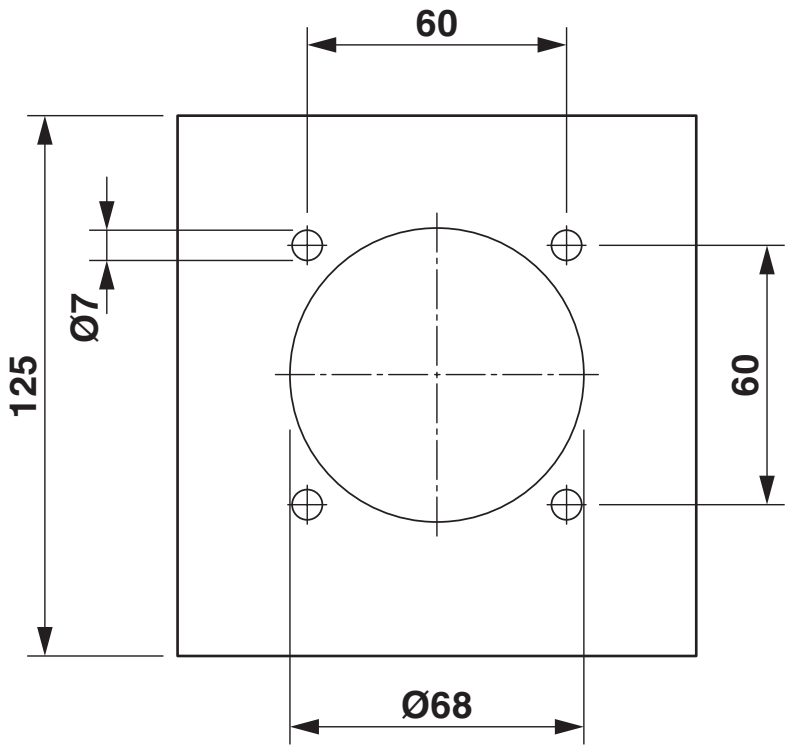

Hole image

Dimensional drawing

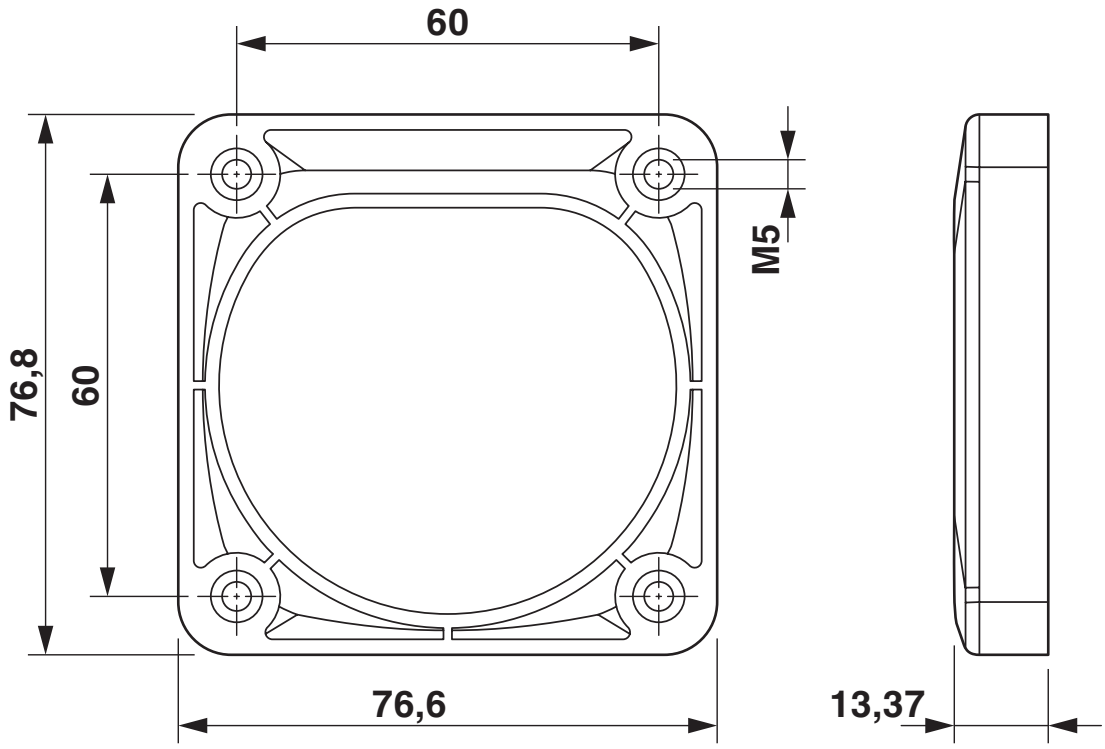

Dimensional drawing

Classifications

ECLASS

ECLASS-15.0	27144792
ECLASS-13.0	27144792

ETIM

ETIM 10.0	EC002884

UNSPSC

UNSPSC 21.0	39121500

Environmental product compliance

EU RoHS

Fulfills EU RoHS substance requirements	Not applicable, No electrical and electronic equipment (EEE), cannot be used in EEE

EU REACH SVHC

REACH candidate substance (CAS No.)	No substance above 0.1 wt%

Phoenix Contact 2026 © - all rights reserved
https://www.phoenixcontact.com

Phoenix Contact USA
586 Fulling Mill Road
Middletown, PA 17057, United States
(+717) 944-1300
info@phoenixcon.com