SI-M1B - Mounting frame

1404494

https://www.phoenixcontact.com/us/products/1404494

Please be informed that the data shown in this PDF document is generated from our online catalog. Please find the complete data in the user documentation. Our general terms of use for downloads are valid.



Mounting frame for two front plates/sockets, plastic frame: black, plastic cover: transparent, closed with 3 mm two-way key bit and rotary knob, included.

Commercial data

Item number	1404494
Packing unit	1 pc
Minimum order quantity	1 pc
Sales key	BF70
Product key	AF7EAX
GTIN	4046356698375
Weight per piece (including packing)	192.2 g
Weight per piece (excluding packing)	192.2 g
Customs tariff number	39269097
Country of origin	DE

Technical data

Notes

Note on application	with enclosed rotary knob

Product properties

Product type	Mounting frame

Dimensions

Dimensional drawing	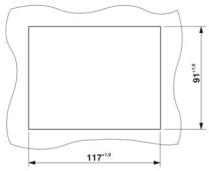
Width	131 mm
Depth	34.5 mm
Length	127 mm

Installation dimensions

Width of the assembly cutout	117 mm
Length of the assembly cutout	91 mm

Material specifications

Material Housing	PBT
Flammability rating according to UL 94	V0

Environmental and real-life conditions

Ambient conditions

Degree of protection	IP65
Ambient temperature (operation)	-30 °C ... 70 °C
Ambient temperature (storage/transport)	-30 °C ... 80 °C

Mounting

Assembly note	Suitable for panel thicknesses 1 mm ... 5 mm

Drawings

Dimensional drawing

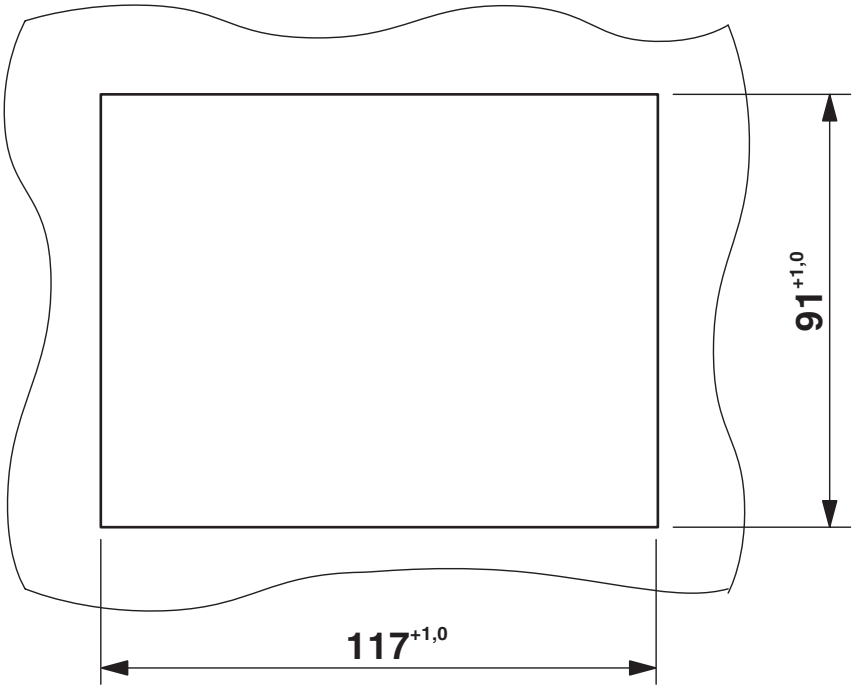

Mounting cutout

Dimensional drawing

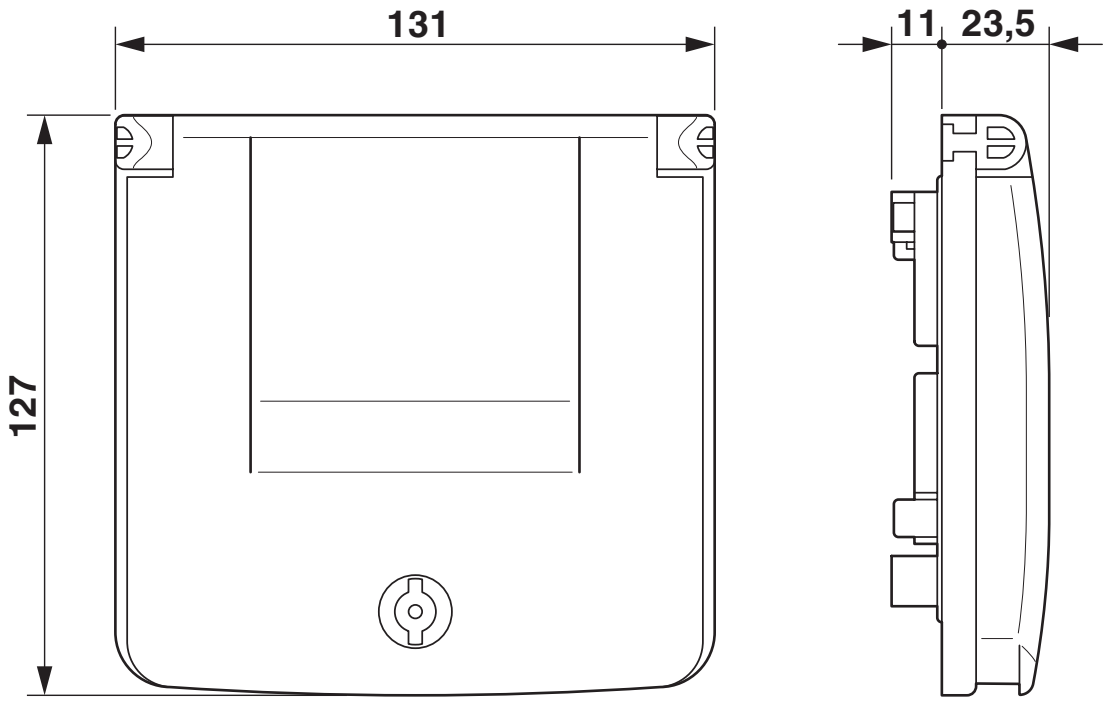

Dimensional drawing

Approvals

To download certificates, visit the product detail page: https://www.phoenixcontact.com/us/products/1404494

cUL Recognized
Approval ID: E255026

UL Recognized
Approval ID: E255026

EAC
Approval ID: RU C-DE.A*30.B.01102

Classifications

ECLASS

ECLASS-13.0	27182806
ECLASS-15.0	27182806

ETIM

ETIM 10.0	EC000456

UNSPSC

UNSPSC 21.0	31261500

Environmental product compliance

EU RoHS

Fulfills EU RoHS substance requirements	Yes, No exemptions

China RoHS

Environment friendly use period (EFUP)	EFUP-E
	No hazardous substances above the limits

EU REACH SVHC

REACH candidate substance (CAS No.)	No substance above 0.1 wt%

EF3.1 Climate Change

CO2e kg	4.526 kg CO2e

Phoenix Contact 2026 © - all rights reserved
https://www.phoenixcontact.com

Phoenix Contact USA
586 Fulling Mill Road
Middletown, PA 17057, United States
(+717) 944-1300
info@phoenixcon.com