HC-ADV-B10-HHWH-1SGM25-PL - Housing

1404228

https://www.phoenixcontact.com/us/products/1404228

Please be informed that the data shown in this PDF document is generated from our online catalog. Please find the complete data in the user documentation. Our general terms of use for downloads are valid.



Sleeve housing B10, with screw locking, material: PA, cable outlets: 1, lateral, M25, height: 95 mm, cable gland: with, Standard

Your advantages

- Integrated screw connection
- Lower costs than metal version
- Low weight
- Lower risk of condensation

Commercial data

Item number	1404228
Packing unit	1 pc
Minimum order quantity	1 pc
Sales key	BF58
Product key	AF7APG
GTIN	4046356681995
Weight per piece (including packing)	138 g
Weight per piece (excluding packing)	135.6 g
Customs tariff number	85389099
Country of origin	DE

Technical data

Notes

General	For contact inserts HC-B10, BB18, DD42, M, K8/24, HV03-I-PT, HC- 3-E...C

Product properties

Product type	Housing with screw locking
Housing type	Sleeve housing
Application	Standard
Type	B10
No. of cable outlets	1
Type of the screw connection	M25
Fixing screws	M6 (screw head: 5 mm Allen screw)
Shielded	no
Cable outlet	lateral
Pg screw connection	with

Connection data

External cable diameter	9 mm ... 17 mm
Tightening torque	3 Nm ... 5 Nm (for M6 mounting screws on the sleeve housing)
Tightening torque, union nut	5.00 Nm

Dimensions

Dimensional drawing	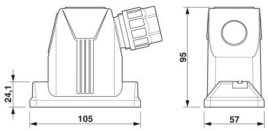
Width	57 mm
Height	95 mm
Length	105 mm
Wrench size, union nut	26 mm

Installation dimensions

Width of the assembly cutout	35 mm
Length of the assembly cutout	65 mm

Material specifications

Material Pressure screw	PA
Flammability rating according to UL 94	V0 (Housing)
Seal material	NBR (profile gasket)
	NBR
Housing material	PA

Locking latch material	Stainless steel
Material of locking screw	Stainless steel

Environmental and real-life conditions

Ambient conditions

Degree of protection	IP66
	IP67
Impact strength	IK08
Ambient temperature (operation)	-40 °C ... 100 °C

Mechanical properties

Mechanical data

Type of the screw connection	M25
Locking type	Screw

Cable/line

External cable diameter Cable 1	9 mm ... 17 mm

Mounting

Assembly note	M6 locking screw, with 5 mm Allen screw head
Fixing screws	M6 (screw head: 5 mm Allen screw)

Drawings

Dimensional drawing

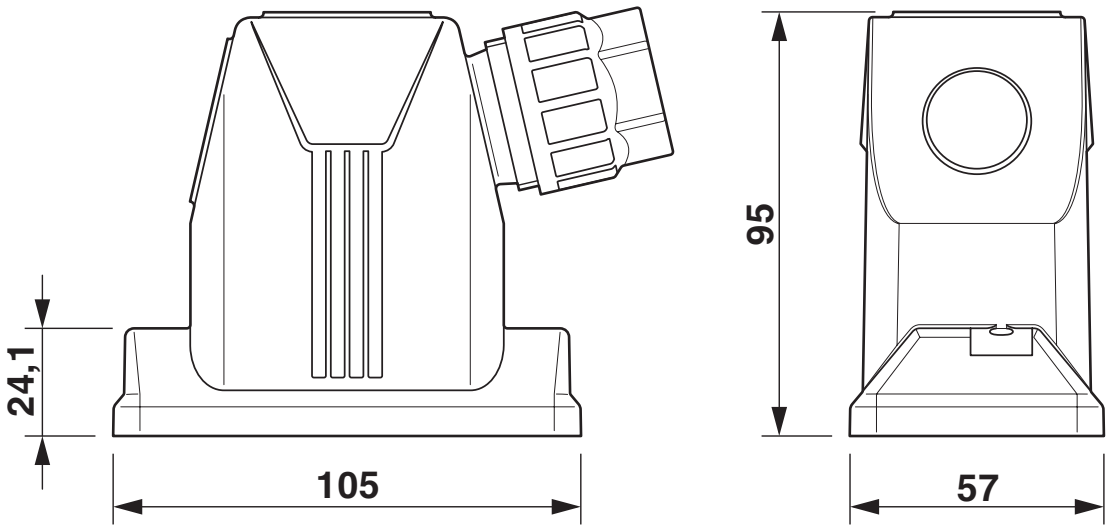

Dimensional drawing

Dimensional drawing

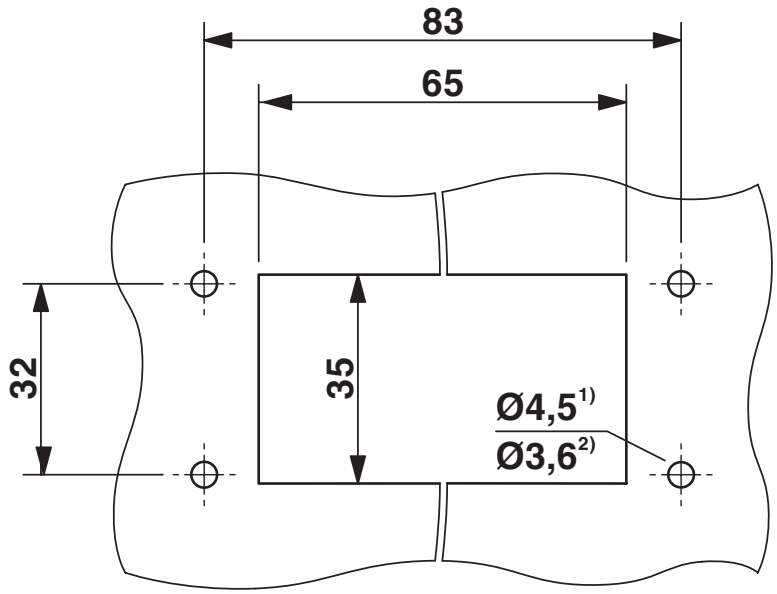

Mounting cutout
1) when M4 screws are used
2) when self-tapping Torx® screws are used (Torx® 20, M4)

Approvals

To download certificates, visit the product detail page: https://www.phoenixcontact.com/us/products/1404228

DNV
Approval ID: TAE000037S

cUL Recognized
Approval ID: E255026

UL Recognized
Approval ID: E255026

Classifications

ECLASS

ECLASS-13.0	27440202
ECLASS-15.0	27440202

ETIM

ETIM 10.0	EC000437

UNSPSC

UNSPSC 21.0	31261500

Environmental product compliance

EU RoHS

Fulfills EU RoHS substance requirements	Yes, No exemptions

China RoHS

Environment friendly use period (EFUP)	EFUP-E
	No hazardous substances above the limits

EU REACH SVHC

REACH candidate substance (CAS No.)	No substance above 0.1 wt%

Phoenix Contact 2026 © - all rights reserved
https://www.phoenixcontact.com

Phoenix Contact USA
586 Fulling Mill Road
Middletown, PA 17057, United States
(+717) 944-1300
info@phoenixcon.com