HC-CIF-B16-HFFD-WH-AL - DIN rail mounting frame

1404218

https://www.phoenixcontact.com/us/products/1404218

Please be informed that the data shown in this PDF document is generated from our online catalog. Please find the complete data in the user documentation. Our general terms of use for downloads are valid.

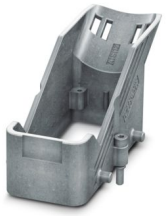

HEAVYCON DIN rail mounting frame, upper part for double locking latch, for HC-CIF...BFWD.. lower parts with double locking latch or for HC-CIF...BFFD.. lower parts, for type B16 contact inserts, with M4 screws with 3 mm Allen screw head, for NS35/7,5 DIN rails

Your advantages

- Stable metal version
- Open base, pre-assembled cable harnesses can be used
- Safe capacitive PE even when connected slightly askew

Commercial data

Item number	1404218
Packing unit	1 pc
Minimum order quantity	1 pc
Sales key	BF60
Product key	AF7AHB
GTIN	4046356681902
Weight per piece (including packing)	102.4 g
Weight per piece (excluding packing)	98.8 g
Customs tariff number	85389099
Country of origin	PL

Technical data

Product properties

Product type	DIN rail mounting frame
Housing type	DIN rail mounting frame
Series	HC-CIF-AL
Type	B16
Fixing screws	M4 with Allen screw, wrench size: 3 mm
Protective cover	no
Pg screw connection	none

Dimensions

Dimensional drawing	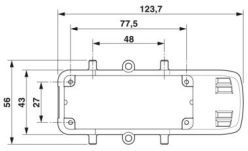
Width	56 mm
Height	49 mm
Length	123.7 mm

Material specifications

Material	Cast aluminum, uncoated
Housing material	Cast aluminum, uncoated
Locking latch material	Steel, galvanized

Mechanical properties

Mechanical data

Locking type	Screw

Environmental and real-life conditions

Ambient conditions

Ambient temperature (operation)	-40 °C ... 125 °C

Mounting

Assembly note	For screw locking: M4, 3 mm Allen screw, 2 Nm tightening torque
Fixing screws	M4 with Allen screw, wrench size: 3 mm

Drawings

Dimensional drawing

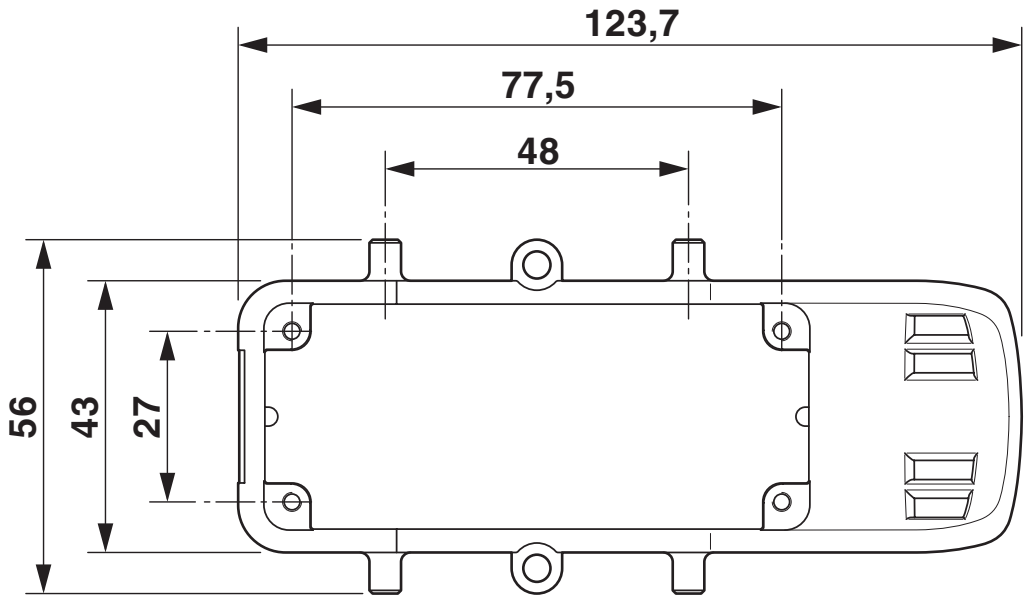

Dimensional drawing top view

Dimensional drawing

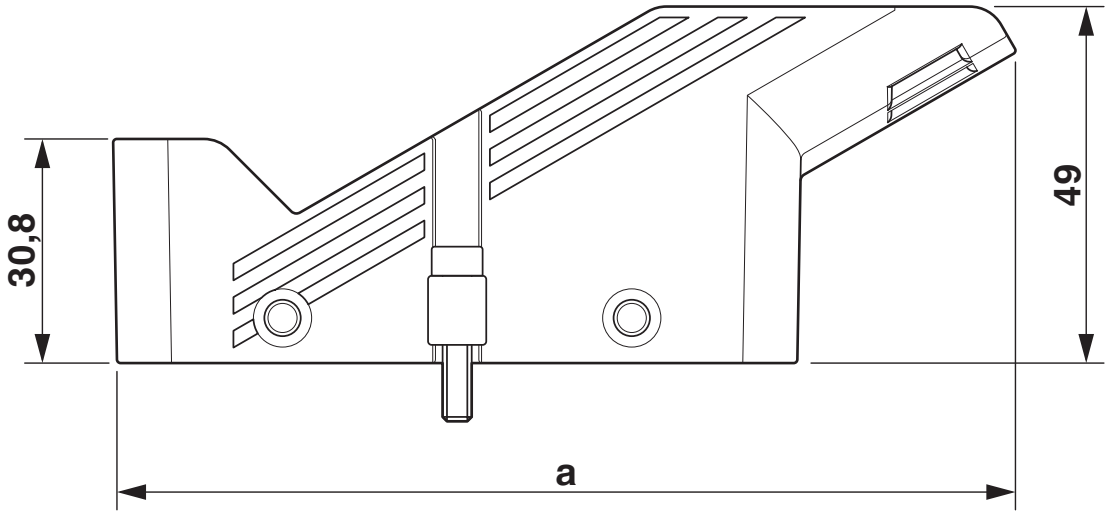

Dimensional drawing

Classifications

ECLASS

ECLASS-13.0	27440210
ECLASS-15.0	27440210

ETIM

ETIM 10.0	EC002310

UNSPSC

UNSPSC 21.0	39121400

Environmental product compliance

EU RoHS

Fulfills EU RoHS substance requirements	Yes, No exemptions

China RoHS

Environment friendly use period (EFUP)	EFUP-E
	No hazardous substances above the limits

EU REACH SVHC

REACH candidate substance (CAS No.)	No substance above 0.1 wt%

EF3.1 Climate Change

CO2e kg	0.434 kg CO2e

Phoenix Contact 2026 © - all rights reserved
https://www.phoenixcontact.com

Phoenix Contact USA
586 Fulling Mill Road
Middletown, PA 17057, United States
(+717) 944-1300
info@phoenixcon.com