SAC-4P-M12MS/1,5-600/M12FR FB - Sensor/actuator cable

1404030

https://www.phoenixcontact.com/us/products/1404030

Please be informed that the data shown in this PDF document is generated from our online catalog. Please find the complete data in the user documentation. Our general terms of use for downloads are valid.



Sensor/actuator cable, 4-position, PP-EPDM, gray RAL 7035, Plug straight M12, coding: A, on Socket angled M12, coding: A, cable length: 1.5 m, Hygienic design, with plastic knurl

Your advantages

- Easy and safe: 100 % electrically tested plug-in components
- Contamination can be detected quickly – thanks to the light color

Commercial data

Item number	1404030
Packing unit	1 pc
Minimum order quantity	1 pc
Sales key	BF03
Product key	AF1CCA
GTIN	4046356677745
Weight per piece (including packing)	59 g
Weight per piece (excluding packing)	49 g
Customs tariff number	85444290
Country of origin	PL

Technical data

Product properties

Product type	Sensor/actuator cable
Application	Food processing industry
Number of positions	4
No. of cable outlets	1
Shielded	no
Coding	A

Insulation characteristics

Overvoltage category	II
Degree of pollution	3

Material specifications

Seal material	FKM
Material of grip body	PP
Contact material	CuSn
Contact surface material	Ni/Au
Contact carrier material	PP
Material for screw connection	Polypropylene

Electrical properties

Insulation resistance	≥ 100 MΩ
Nominal voltage U_N	250 V AC
	250 V DC
Nominal current I_N	4 A

Mechanical properties

Mechanical data

Insertion/withdrawal cycles	≥ 100

Signaling

Status display	no
Status display present	no

Connection data

Conductor connection

Tightening torque	0.4 Nm (M12 connector)

Connector

Connection 1

Type	Plug straight M12

Number of positions	4
Coding type	A

Connection 2

Type	Socket angled M12
Number of positions	4
Coding type	A

Cable/line

Cable length	1.5 m
Dimensional drawing	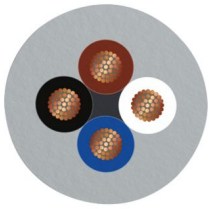
Cable weight	30 kg/km
Number of positions	4
Shielded	no
Conductor structure signal line	42x 0.10 mm
AWG signal line	22
Conductor cross-section	4x 0.34 mm² (Signal line)
Wire diameter incl. insulation	1.27 mm ±0.02 mm (Signal line)
External cable diameter	4.70 mm ±0.15 mm
Outer sheath, material	PP-EPDM
External sheath, color	gray RAL 7035
Conductor material	Bare Cu litz wires
Material wire insulation	PP
Single wire, color	brown, white, blue, black
Thickness, insulation	≥ 0.21 mm
Thickness, outer sheath	approx. 0.80 mm
Overall twist	4 wires, twisted
Length of twist, overall twist	48 mm
Max. conductor resistance	approx. 58 Ω/km
Insulation resistance	≥ 1 GΩ*km
Nominal voltage, cable	≤ 300 V
Test voltage	≥ 3000 V
Minimum bending radius, fixed installation	5 x D
Minimum bending radius, flexible installation	10 x D
Smallest bending radius, fixed installation	24 mm
Smallest bending radius, movable installation	47 mm
Dynamic load capacity (bending)	Max. bending cycles: 4000000, Bending radius: 10 x D,

	Traversing path: 10 m, Traversing rate: 3 m/s, Acceleration: 10 m/s²
Dynamic load capacity (torsion)	Torsion: ±270 °/m, Torsion cycles: ≥4000000, Torsional frequency: ≤25 Torsion cycles/min
Halogen-free	in accordance with DIN VDE 0472 part 815
Other resistance	Resistant to cold bending and cold impacts (according to DIN EN 60811-1-4 (-40 °C))
Special properties	partly suitable for use with drag chain
Ambient temperature (operation)	-40 °C ... 105 °C (cable, fixed installation)
	-25 °C ... 105 °C (Cable, flexible installation)

Environmental and real-life conditions

Ambient conditions

Degree of protection	IP65
	IP67
	IP68
	IP69K
Ambient temperature (operation) (male connector/female connector)	-40 °C ... 105 °C (Plug / socket)

Standards and regulations

Standard designation	M12 connector
Standards/specifications	IEC 61076-2-101
Standard designation	Material conformance
Standards/specifications	FDA 21 CFR 177.2600

Drawings

Dimensional drawing

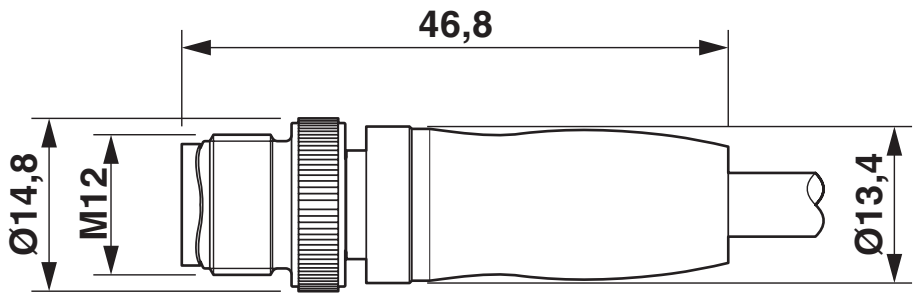

Plug, M12 x 1, straight, shielded

Dimensional drawing

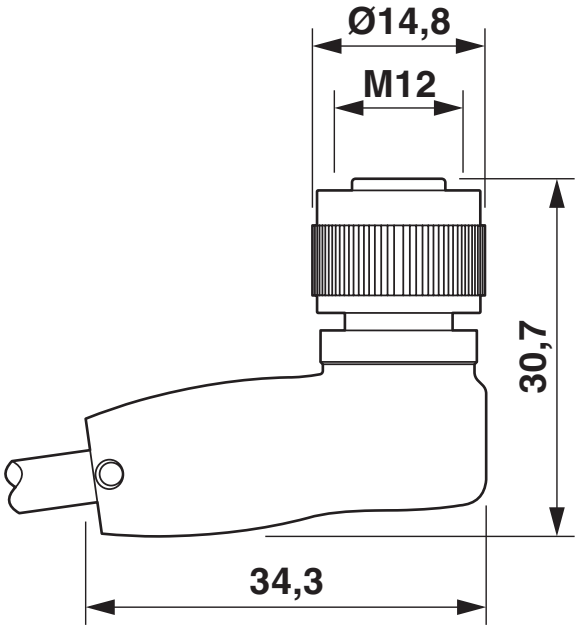

M12 x 1 socket, angled

Schematic diagram

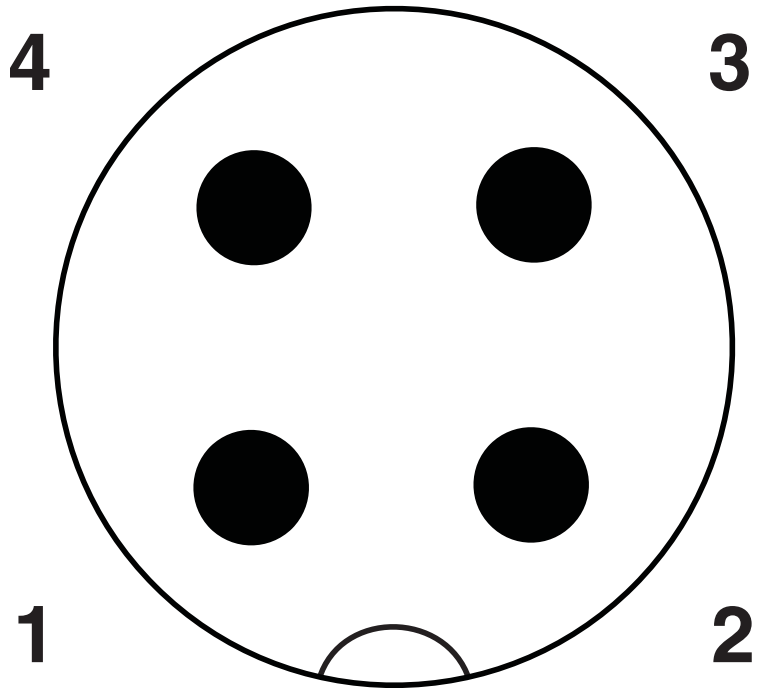

Pin assignment M12 plug, 4-pos., A-coded, view plug side

Schematic diagram

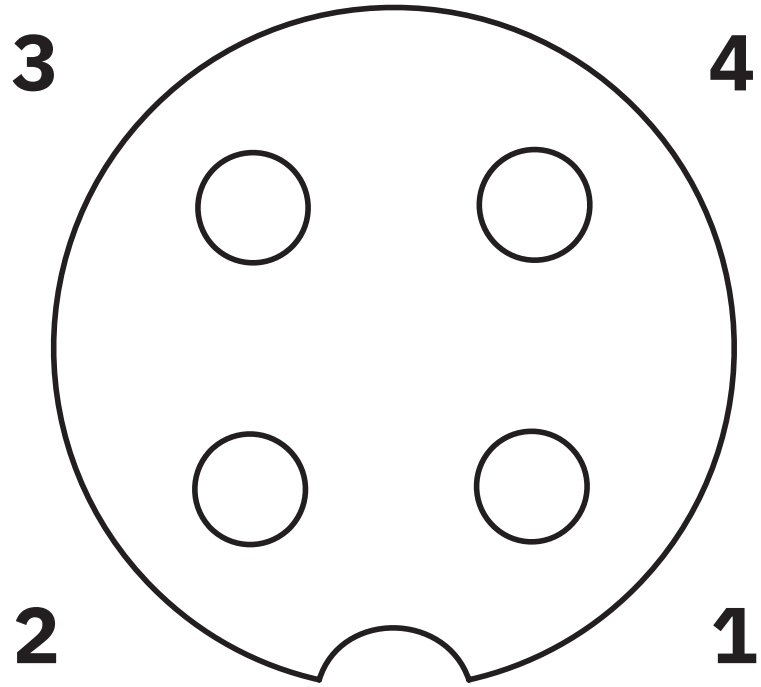

Pin assignment M12 socket, 4-pos., A-coded, view female side

Circuit diagram

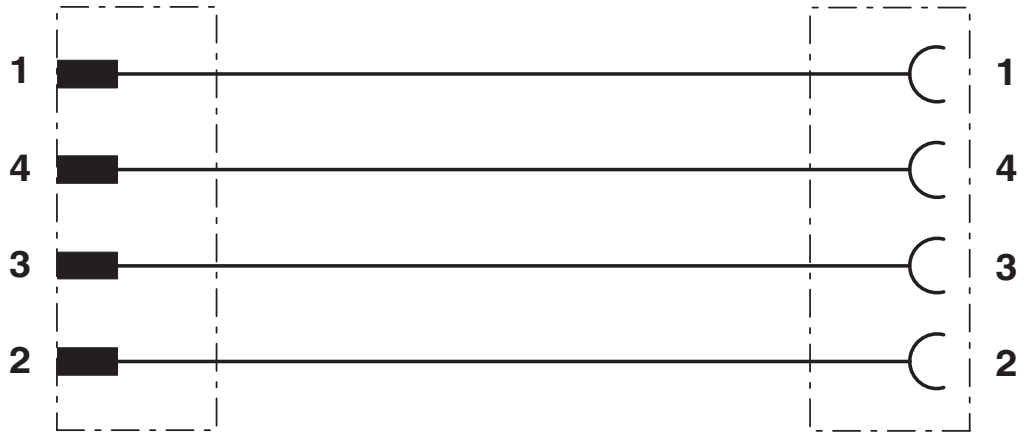

Contact assignment of the M12 plug and the M12 socket

Approvals

To download certificates, visit the product detail page: https://www.phoenixcontact.com/us/products/1404030

EAC-RoHS
Approval ID: RU D-DE.HB35.B.00387

Classifications

ECLASS

ECLASS-13.0	27060311
ECLASS-15.0	27060311

ETIM

ETIM 10.0	EC001855

UNSPSC

UNSPSC 21.0	26121600

Environmental product compliance

EU RoHS

Fulfills EU RoHS substance requirements	Yes, No exemptions

China RoHS

Environment friendly use period (EFUP)	EFUP-E
	No hazardous substances above the limits

EU REACH SVHC

REACH candidate substance (CAS No.)	No substance above 0.1 wt%

EF3.1 Climate Change

CO2e kg	0.55 kg CO2e

Phoenix Contact 2026 © - all rights reserved
https://www.phoenixcontact.com

Phoenix Contact USA
586 Fulling Mill Road
Middletown, PA 17057, United States
(+717) 944-1300
info@phoenixcon.com