USA 10 - Rail adapter

1201578

https://www.phoenixcontact.com/us/products/1201578

Please be informed that the data shown in this PDF document is generated from our online catalog. Please find the complete data in the user documentation. Our general terms of use for downloads are valid.



Rail adapter, for M3 screws, depth: 7.4 mm, width: 10 mm, height: 42.6 mm, diameter: 2.8 mm, color: gray, mounting type: Plug-on assembly

Your advantages

- The universal adapters are used to secure and hold electrical or electronic switching devices
- For self-cutting M3 screws
- They allow fully insulated mounting of components or DIN rails

Commercial data

Item number	1201578
Packing unit	25 pc
Minimum order quantity	25 pc
Sales key	BE07
Product key	BE7114
GTIN	4017918017392
Weight per piece (including packing)	2.928 g
Weight per piece (excluding packing)	2.928 g
Customs tariff number	39269097
Country of origin	DE

Technical data

Product properties

Product type	Mounting material

Dimensions

Dimensional drawing	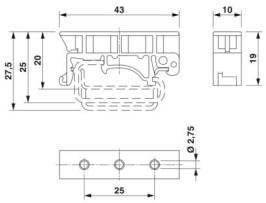
Width	10 mm
Height	42.6 mm
Depth	7.4 mm
Diameter	2.8 mm

Material specifications

Color	gray (RAL 7042)
Material	PA
Flammability rating according to UL 94	V2
Coating	uncoated
Static insulating material application in cold	-40 °C
Temperature index of insulation material (DIN EN 60216-1 (VDE 0304-21))	125 °C
Relative insulation material temperature index (Elec., UL 746 B)	125 °C

Environmental and real-life conditions

Ambient conditions

Ambient temperature (operation)	-60 °C ... 105 °C (max. short-term operating temperature RTI Elec.)
Ambient temperature (storage/transport)	-25 °C ... 60 °C (for a short time, not exceeding 24 h, -60 °C to +70 °C)
Ambient temperature (assembly)	-5 °C ... 70 °C
Ambient temperature (actuation)	-5 °C ... 70 °C
Permissible humidity (storage/transport)	30 % ... 70 %

Mounting

Mounting type	Plug-on assembly

Drawings

Dimensional drawing

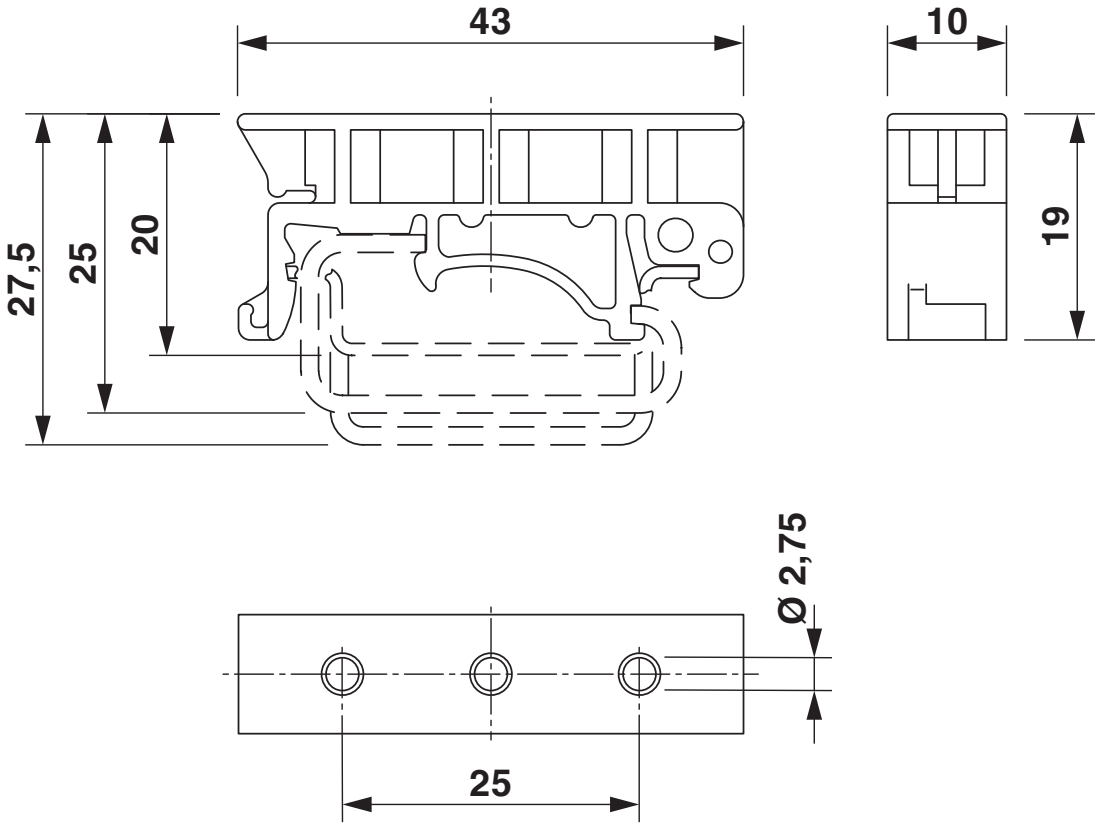

Classifications

ECLASS

ECLASS-13.0	27370419
ECLASS-15.0	27370419

ETIM

ETIM 10.0	EC001024

UNSPSC

UNSPSC 21.0	39121400

Environmental product compliance

EU RoHS

Fulfills EU RoHS substance requirements	Yes, No exemptions

China RoHS

Environment friendly use period (EFUP)	EFUP-E
	No hazardous substances above the limits

EU REACH SVHC

REACH candidate substance (CAS No.)	No substance above 0.1 wt%

Phoenix Contact 2026 © - all rights reserved
https://www.phoenixcontact.com

Phoenix Contact USA
586 Fulling Mill Road
Middletown, PA 17057, United States
(+717) 944-1300
info@phoenixcon.com