AI 2,5-8 BU S1 - Ferrule

1200108

https://www.phoenixcontact.com/us/products/1200108

Please be informed that the data shown in this PDF document is generated from our online catalog. Please find the complete data in the user documentation. Our general terms of use for downloads are valid.

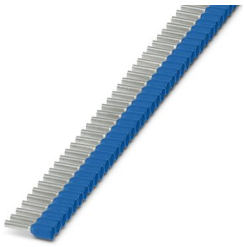

Taped ferrules, 2.5 mm^2, sleeve length 8 mm, with plastic collar, according to DIN 46228-4, blue, for processing with the CRIMPFOX 4 IN 1, 10 strips each with 40 sleeves per strip.

Commercial data

Item number	1200108
Packing unit	400 pc
Minimum order quantity	400 pc
Sales key	BH34
Product key	BH3415
GTIN	4055626043050
Weight per piece (including packing)	0.145 g
Weight per piece (excluding packing)	0.145 g
Customs tariff number	85369010
Country of origin	DE

Technical data

Product properties

Product type	Cable end sleeve
Conductor category	stranded conductors, class 2, 5, 6 / B, C, K, M
Product property	For processing with CRIMPFOX 4 IN 1
	UL certified
	Made from soft tin-plated electrolytic copper
	Correspond to the requirements of DIN 46228-4 and UL 486F in terms of size
	Plastic collar made of polypropylene
	Halogen-free
	Long/short-term temperature: +105°C/+120°C

Connection data

Conductor connection

Conductor cross-section flexible max.	2.5 mm²
Conductor cross-section AWG max.	14
Stripping length	11 mm

Dimensions

Dimensional drawing	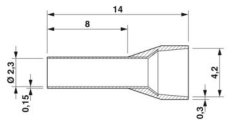
Sleeve length	14 mm
Length contact range	8 mm
Maximum stripping length	11 mm
Ferrule diameter	2.3 mm
Sleeve wall thickness	0.15 mm
Insulating collar thickness	0.3 mm
Inner dimensions of the insulating collar	4.2 mm

Material specifications

Color	blue (RAL 5015)
Material	CU-DHP
Flammability rating according to UL 94	HB
Coating	galvanically tin-plated
Surface characteristics	Tin-plated
Components	free from silicone and halogen

Mechanical properties

Technical data

Sleeve length	14 mm

Environmental and real-life conditions

Ambient conditions

Permanent temperature	105 °C (-40 °C no load / 0 °C dynamic load)
Short-term temperature	120 °C

Standards and regulations

Design according to standard	DIN 46228-4, UL 486F-E

Drawings

Dimensional drawing

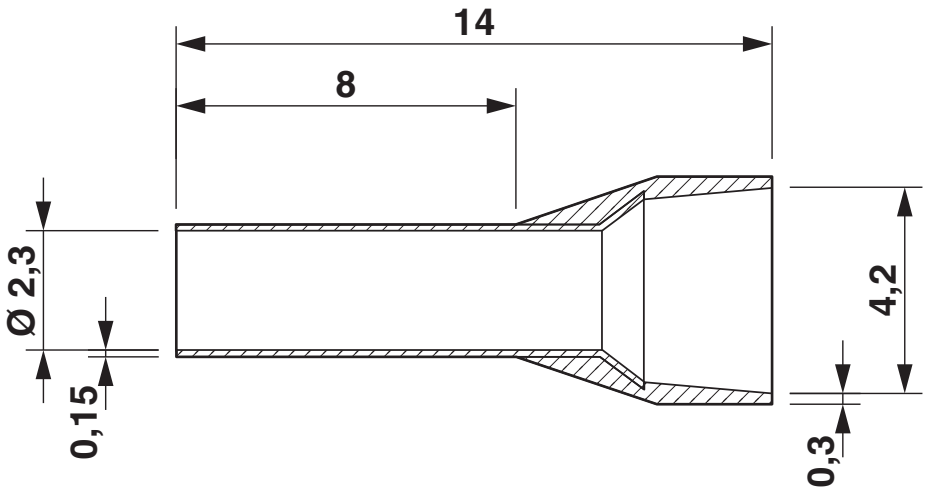

Approvals

To download certificates, visit the product detail page: https://www.phoenixcontact.com/us/products/1200108

cULus Listed
Approval ID: E488001

Classifications

ECLASS

ECLASS-13.0	27400201
ECLASS-15.0	27400201

ETIM

ETIM 10.0	EC000005

UNSPSC

UNSPSC 21.0	27121700

Environmental product compliance

EU RoHS

Fulfills EU RoHS substance requirements	Yes, No exemptions

China RoHS

Environment friendly use period (EFUP)	EFUP-E
	No hazardous substances above the limits

EU REACH SVHC

REACH candidate substance (CAS No.)	No substance above 0.1 wt%

EF3.1 Climate Change

CO2e kg	0.002 kg CO2e

Phoenix Contact 2026 © - all rights reserved
https://www.phoenixcontact.com

Phoenix Contact USA
586 Fulling Mill Road
Middletown, PA 17057, United States
(+717) 944-1300
info@phoenixcon.com