SACB- 4/3-L- 5,0PUR-M8 HD - Distributor box

1197207

https://www.phoenixcontact.com/us/products/1197207

Please be informed that the data shown in this PDF document is generated from our online catalog. Please find the complete data in the user documentation. Our general terms of use for downloads are valid.



Distributor box, application: Standard, connection method: M8 socket Metal, number of slots: 4, number of positions: 3, coding: A, slot assignment: single, status display: yes, PNP; master cable connection: Fixed connection 180°, PUR/PVC, cable length: 5 m, shielding: no

Your advantages

- Safety in the field, thanks to molded housing and high degree of protection
- Convenient: increased machine availability thanks to quick and easy diagnostics

Commercial data

Item number	1197207
Packing unit	1 pc
Minimum order quantity	1 pc
Sales key	BF40
Product key	AF3BCA
GTIN	4063151256326
Weight per piece (including packing)	443 g
Weight per piece (excluding packing)	22.22 g
Customs tariff number	85444290
Country of origin	DE

Technical data

Notes

Assembly note	NOTE: Observe the permissible bending radii when routing cables, since the degree of protection may be at risk if the bending forces are too high. Reduce mechanical loads upstream of the connector, e.g., by using cable ties.
Note on application	Unused slots are to be sealed off prior to commissioning. Suitable sealing elements are to be found under "Accessories".

Product properties

Product type	Distributor box
Application	Standard
Number of positions	3
Number of slots	4
Coding	A
LED	yes

System properties

Local diagnostics

Monitored function	Supply voltage
Optical representation	Green LED

Electrical properties

Max. operating voltage U_{max}	30 V DC
Local diagnostics	Supply voltage Green LED
	Status display I/O Yellow LED
Nominal voltage U_N	24 V DC
Rated current, total	6 A
Max. current carrying capacity per path	2 A
Current carrying capacity per slot	2 A

Connection data

Conductor connection

Sensor/actuator connection system	M8 socket
Tightening torque slot sensor/actuator cable	0.2 Nm
Tightening torque of mounting screw for fixing the housing	0.8 Nm

Connection assignment

Slot/position = Wire color or connection	1 / 4 (A) = WH
	2 / 4 (A) = GN
	3 / 4 (A) = YE
	4 / 4 (A) = GY
	1-4 / 1 (+ 24 V) = BN

	1-4 / 3 (0 V) = BU

Signaling

Status display present	yes

Dimensions

Dimensional drawing	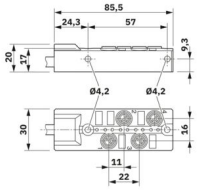
Width	30 mm
Height	20 mm
Length	85.5 mm

Material specifications

Material Threaded sleeve	Cu alloy
Material Housing	PBT
Material Molding compound	PUR
Seal material	FKM
Contact material	CuZn
Contact surface material	Ni/Au
Contact carrier material	PBT

Cable/line

Cable length	5 m

PUR/PVC black [PUR]

Dimensional drawing	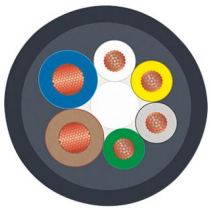
Cable weight	71.7 kg/km
UL AWM Style	20549
Number of positions	6
Shielded	no
Cable type	PUR/PVC black [PUR]
Conductor structure signal line	19x 0.15 mm
AWG signal line	22

Conductor structure, voltage supply	42x 0.15 mm
AWG power supply	18
Conductor cross-section	4x 0.34 mm² (Signal line)
	2x 0.75 mm² (power line)
Wire diameter incl. insulation	1.3 mm ±0.1 mm (Signal line)
	1.8 mm ±0.1 mm (power line)
External cable diameter	6.80 mm ±0.2 mm
Outer sheath, material	PUR
External sheath, color	black RAL 9005
Conductor material	Bare Cu litz wires
Material wire insulation	PVC
Single wire, color	brown, blue, white, green, yellow, gray
Inner sheath thickness	≥ 0.15 mm
Thickness, outer sheath	≥ 0.38 mm
Overall twist	Wires twisted in layers
Nominal voltage, cable	300 V
Test voltage	2000 V
Minimum bending radius, fixed installation	7.5 x D
Minimum bending radius, flexible installation	10 x D
Smallest bending radius, fixed installation	51 mm
Smallest bending radius, movable installation	68 mm
Dynamic load capacity (bending)	Max. bending cycles: 1500000, Bending radius: 68 mm, Traversing path: 2 m, Traversing rate: 2 m/s
Flame resistance	DIN EN 50265
Resistance to oil	according to VDE 0472 Part 803
Other resistance	Highly resistant to acids, alkaline solutions and solvents
Special properties	Silicone-free
Ambient temperature (operation)	-40 °C ... 90 °C (cable, fixed installation)
	-5 °C ... 80 °C (Cable, flexible installation)
	80 °C (in acc. with UL)

Environmental and real-life conditions

Ambient conditions

Degree of protection	IP67
Ambient temperature (operation)	-25 °C ... 80 °C

Standards and regulations

Standard designation	M8 connector
Standards/specifications	IEC 61076-2-104

Drawings

Dimensional drawing

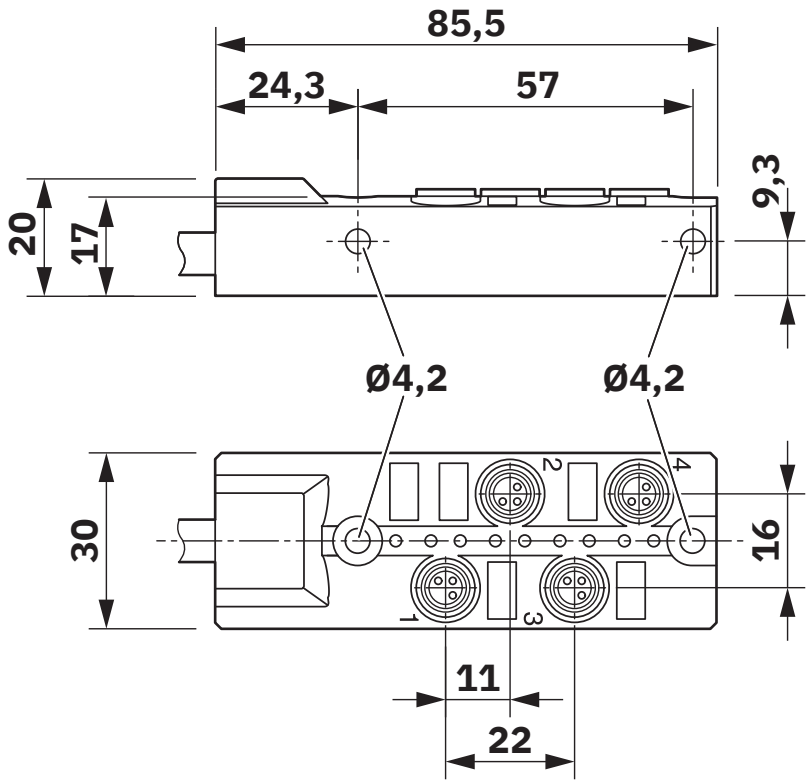

Schematic diagram

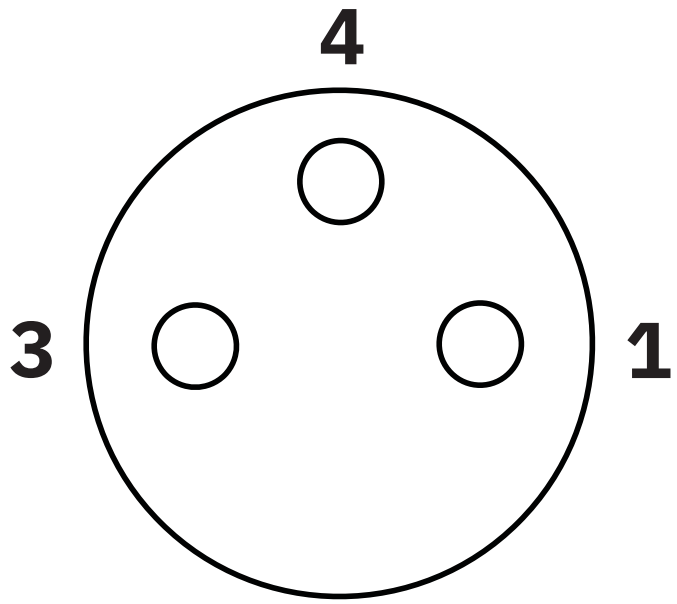

M8 slot, socket, 3-pos.

Circuit diagram

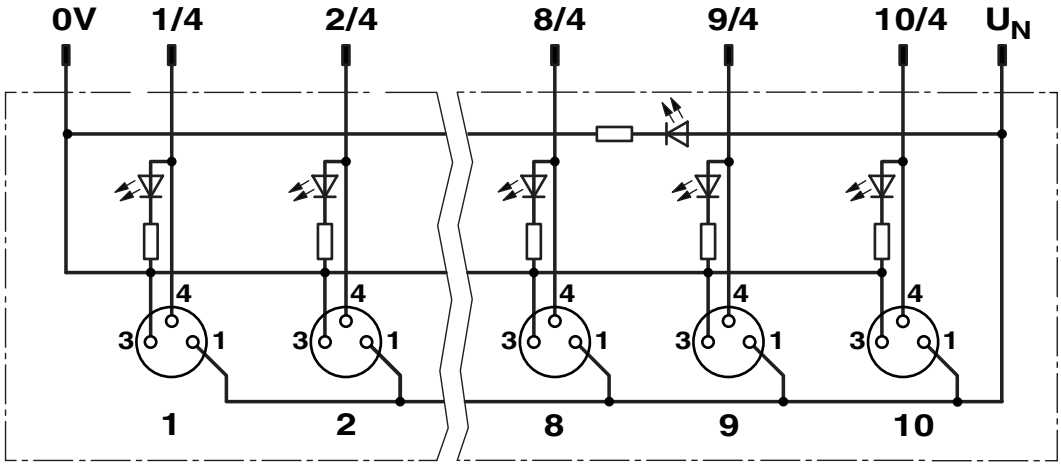

Approvals

To download certificates, visit the product detail page: https://www.phoenixcontact.com/us/products/1197207

UL Recognized
Approval ID: FILE E 118976

	Nominal voltage U_N	Nominal current I_N	Cross section AWG	Cross section mm^2
keine				
	24 V	-	-	-

cUL Recognized
Approval ID: FILE E 118976

	Nominal voltage U_N	Nominal current I_N	Cross section AWG	Cross section mm^2
keine				
	24 V	-	-	-

Classifications

ECLASS

ECLASS-13.0	27440108
ECLASS-15.0	27440108

ETIM

ETIM 10.0	EC002585

UNSPSC

UNSPSC 21.0	31251500

Environmental product compliance

EU RoHS

Fulfills EU RoHS substance requirements	Yes, No exemptions

China RoHS

Environment friendly use period (EFUP)	EFUP-E
	No hazardous substances above the limits

EU REACH SVHC

REACH candidate substance (CAS No.)	No substance above 0.1 wt%

Phoenix Contact 2026 © - all rights reserved
https://www.phoenixcontact.com

Phoenix Contact USA
586 Fulling Mill Road
Middletown, PA 17057, United States
(+717) 944-1300
info@phoenixcon.com