HC-M-B10-MFH-B - Module carrier frame

1182088

https://www.phoenixcontact.com/us/products/1182088

Please be informed that the data shown in this PDF document is generated from our online catalog. Please find the complete data in the user documentation. Our general terms of use for downloads are valid.



Module carrier frame, size: B10, type : for the panel mounting side (a, b, c, ...), 4 mm^2 ... 6 mm^2, application: Module carrier frame

Commercial data

Item number	1182088
Packing unit	1 pc
Minimum order quantity	1 pc
Sales key	BF62
Product key	AF7ACD
GTIN	4063151218874
Weight per piece (including packing)	62 g
Weight per piece (excluding packing)	60.7 g
Customs tariff number	85389099
Country of origin	CN

Technical data

Notes

General	This product replaces 1417399 HC-M-B10-MF-B

Product properties

Product type	Module carrier frame
Series	HC-M-B
	HC-M-02
	HC-M-03
	HC-M-03/04
	HC-M-04
	HC-M-05
	HC-M-06
	HC-M-08
	HC-M-08-GBIT
	HC-M-12
	HC-M-17
	HC-M-20
	HC-M-25
	HC-M-DSUB
	HC-M-EMV
	HC-M-HV
	HC-M-HS
	HC-M-00
Application	Module carrier frame
Type	B10
Number of module slots	3
Frame type	Module carrier frame

Connection data

Conductor connection

Conductor cross-section	4 mm² ... 6 mm² (for PE conductor - power side)
	1 mm² ... 2.5 mm² (for PE conductor control side)
Connection cross section AWG	12 ... 10 (for PE conductor - power side)
	18 ... 14 (for PE conductor control side)
Tightening torque	0.5 Nm ... 0.8 Nm (Mounting screws for mounting in the HEAVYCON housing)

Dimensions

Dimensional drawing	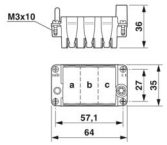
Width	34.9 mm
Height	36 mm
Length	64 mm

Material specifications

Contact carrier material	Die-cast zinc alloy

Mechanical properties

Mechanical data

Insertion/withdrawal cycles	≥ 500

Environmental and real-life conditions

Ambient conditions

Ambient temperature (operation)	-40 °C ... 125 °C

Mounting

Assembly note	HC-MHR-PE16 (1636981) for PE connection extension to 16 mm².
	Use wire end protection for PE wires (PE connection screws without wire protection) for housings without lateral connectors, max. thread length of the screw connection 12 mm
	When using the module carrier frame in metal housings, the connection of the PE conductor must be ensured via the PE connection provided on the module carrier frame or via a special metal PE module

Drawings

Dimensional drawing

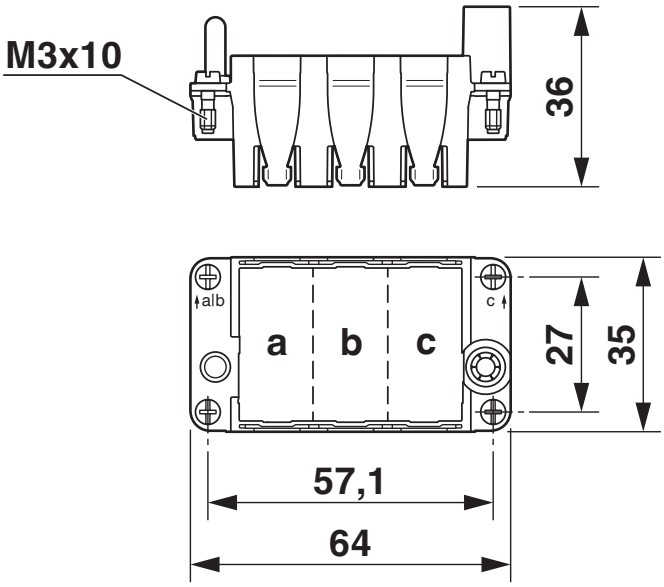

Dimensional drawing

Approvals

To download certificates, visit the product detail page: https://www.phoenixcontact.com/us/products/1182088

UL Recognized
Approval ID: E118976

UL Recognized
Approval ID: E118976

CSA
Approval ID: 158887

UL Recognized
Approval ID: E468743

Classifications

ECLASS

ECLASS-13.0	27440206
ECLASS-15.0	27440206

ETIM

ETIM 10.0	EC002312

UNSPSC

UNSPSC 21.0	31261500

Environmental product compliance

EU RoHS

Fulfills EU RoHS substance requirements	Yes, No exemptions

China RoHS

Environment friendly use period (EFUP)	EFUP-E
	No hazardous substances above the limits

EU REACH SVHC

REACH candidate substance (CAS No.)	No substance above 0.1 wt%

Phoenix Contact 2026 © - all rights reserved
https://www.phoenixcontact.com

Phoenix Contact USA
586 Fulling Mill Road
Middletown, PA 17057, United States
(+717) 944-1300
info@phoenixcon.com