PSR-M-GW-PB-SC - Data interface

1105099

https://www.phoenixcontact.com/us/products/1105099

Please be informed that the data shown in this PDF document is generated from our online catalog. Please find the complete data in the user documentation. Our general terms of use for downloads are valid.



Gateway for connecting a PSR-M base module to a higher-level controller, PROFIBUS DP, TBUS interface, plug-in screw terminal block, TBUS connector included

Product description

The configurable and individually scalable PSRmodular safety system is a flexible safety solution for monitoring your machine or system. PSRmodular gateways connect a PSR-M basic module to a higher-level controller. This gateway is designed for use with PROFIBUS.

Your advantages

- Cost-effective safety solution with a high level of adaptability to individual requirements
- Fast startup, thanks to easy hardware and software configuration
- Machine downtimes minimized with comprehensive, easy-to-understand diagnostics
- Low housing width of just 22.6 mm

ELEKTROGERÄTE RÜCKNAHME

Commercial data

Item number	1105099
Packing unit	1 pc
Minimum order quantity	1 pc
Sales key	DN02
Product key	DNA365
GTIN	4055626973371
Weight per piece (including packing)	175.7 g
Weight per piece (excluding packing)	160 g
Customs tariff number	85371098

Country of origin	IT

Technical data

Notes

Note on application	Only for industrial use

Product properties

Product type	Gateways/Proxies

Insulation characteristics

Protection class	III (EN 50178)

Insulation characteristics

Overvoltage category	II
Degree of pollution	2

Electrical properties

Maximum power dissipation for nominal condition	1.44 W
Nominal operating mode	100% operating factor
Interfaces	DIN rail TBUS for connection to the master module, supplied as standard
Rated surge voltage/insulation	Basic insulation 4 kV

Supply

Designation	A1/A2
Rated control circuit supply voltage U_S	19.2 V DC ... 28.8 V DC
Rated control circuit supply voltage U_S	24 V DC -20 % / +20 % (external fuse, typically 4 A)
Rated control supply current I_S	typ. 60 mA
Power consumption at U_S	typ. 1.44 W
Inrush current	< 2.2 A (Δt = 1 ms at U_s)
Filter time	typ. 5 ms (at A1 in the event of voltage dips at U_s)
Protective circuit	Serial protection against polarity reversal
	Suppressor diode

Connection data

Connection method	Screw connection
Stripping length	7 mm
Tightening torque	0.5 ... 0.6 Nm
Screw thread	M3

Interfaces

Data: Network interface

Communication protocol	PROFIBUS DP
Communication standard	IEC 61158, RS-485 2-wire
Connection method	D-SUB-9 female connector
Number of connections	1

Transmission speed	12 Mbps

Data: Service interface

Connection method	USB 2.0 Hi-Speed
Number of connections	1
Maximum cable length	3 m

Signaling

Status display	1 x LED (green), 2 x LED (green, red)
Operating voltage display	1 x LED (green)
Error indication	2 x LED (red)

Dimensions

Width	22.61 mm
Height	112.58 mm
Depth	114.75 mm

Material specifications

Color (Housing)	gray (RAL 7042)
Housing material	Polyamide PA non-reinforced

Environmental and real-life conditions

Ambient conditions

Degree of protection	IP20
Min. degree of protection of inst. location	IP54
Ambient temperature (operation)	-10 °C ... 55 °C (observe derating)
Ambient temperature (storage/transport)	-20 °C ... 85 °C
Maximum altitude	≤ 2000 m (Above sea level)
Max. permissible humidity (storage/transport)	95 % (non-condensing)
Max. permissible relative humidity (operation)	95 % (non-condensing)
Shock	10g for Δt = 16 ms (continuous shock, 1000 shocks in each space direction)
Vibration (operation)	10 Hz ... 150 Hz, 2g

Approvals

CE

Identification	CE-compliant

Mounting

Mounting type	DIN rail mounting
Mounting position	vertical or horizontal

Drawings

Application drawing

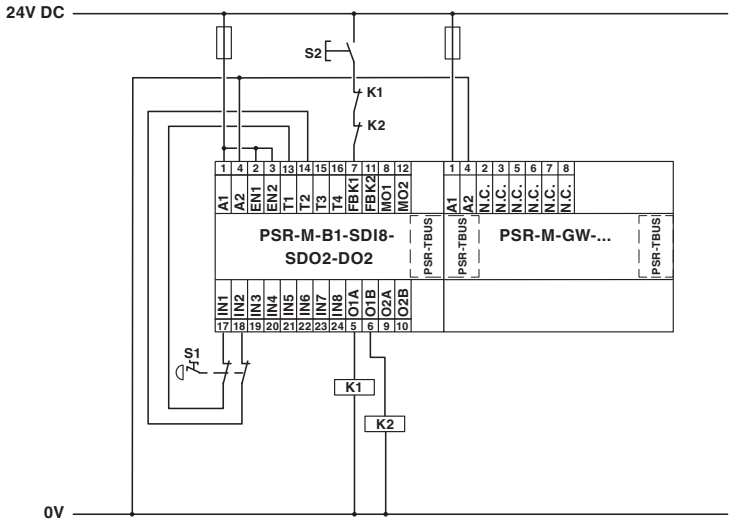

Block diagram

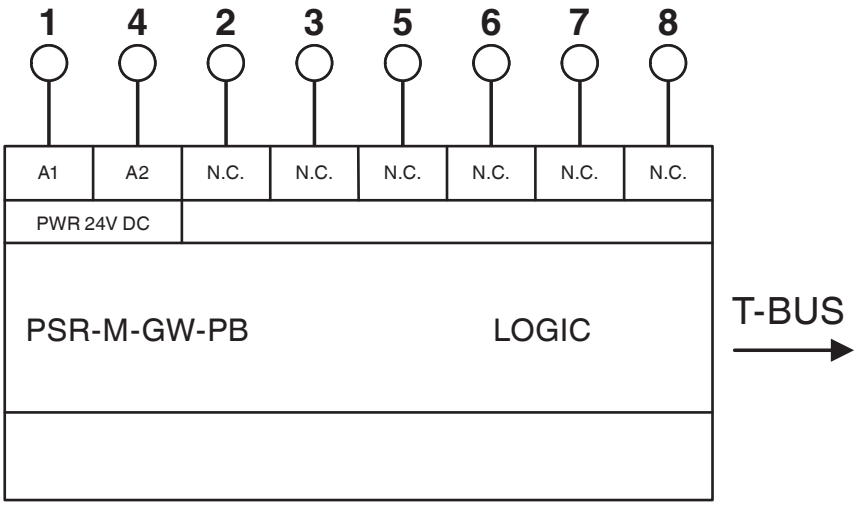

Approvals

To download certificates, visit the product detail page: https://www.phoenixcontact.com/us/products/1105099

cULus Listed
Approval ID: E238705

Functional Safety
Approval ID: Z10029429 0013Rev.02

Classifications

ECLASS

ECLASS-13.0	27242608
ECLASS-15.0	27242608

ETIM

ETIM 10.0	EC001604

UNSPSC

UNSPSC 21.0	32151600

Environmental product compliance

EU RoHS

Fulfills EU RoHS substance requirements	Yes, No exemptions

China RoHS

Environment friendly use period (EFUP)	EFUP-E
	No hazardous substances above the limits

EU REACH SVHC

REACH candidate substance (CAS No.)	No substance above 0.1 wt%

Phoenix Contact 2026 © - all rights reserved
https://www.phoenixcontact.com

Phoenix Contact USA
586 Fulling Mill Road
Middletown, PA 17057, United States
(+717) 944-1300
info@phoenixcon.com