AXL F BP SE6 - Module carrier

1088136

https://www.phoenixcontact.com/us/products/1088136

Please be informed that the data shown in this PDF document is generated from our online catalog. Please find the complete data in the user documentation. Our general terms of use for downloads are valid.

CRA-READY



Axioline F, Backplane, 6 slots for Axioline Smart Elements, transmission speed in the local bus: 100 Mbps, degree of protection: IP20; The product is being prepared for compliance with the Cyber Resilience Act (CRA).

Product description

The Axioline F backplane is intended for use in a station that is opened by an Axioline F bus coupler or an Axiocontrol. The backplane has six “Smart Element Interface” slots to accept Axioline Smart Elements.

Your advantages

- Preparing the communications power supply for the plugged-in Axioline Smart Elements
- Supply feed-in for the peripheral supply U_P for the plugged in Axioline Smart Elements

ELEKTROGERÄTE RÜCKNAHME

Commercial data

Item number	1088136
Packing unit	1 pc
Minimum order quantity	1 pc
Sales key	DR05
Product key	DRIBU1

GTIN	4055626886381
Weight per piece (including packing)	117.14 g
Weight per piece (excluding packing)	110.75 g
Customs tariff number	85389091
Country of origin	DE

Technical data

Dimensions

Dimensional drawing	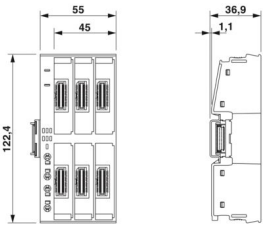
Width	55 mm
Height	122.4 mm
Depth	36.9 mm
Note on dimensions	The depth applies when a TH 35-7.5 DIN rail is used (in accordance with EN 60715).
Complete module width	55 mm
Complete module height	124.6 mm
Complete module depth	76.1 mm
Note	The depth applies when a TH 35-7.5 DIN rail is used (in accordance with EN 60715).

Notes

Note on application	Only for industrial use
Note on application	As things stand now, we are preparing the product so that, as of December 11, 2027, it will comply with the requirements of the EU Cyber Resilience Act (CRA) based on the information currently available regarding the CRA.

Mounting

Mounting type	DIN rail mounting
Mounting position	Panel mounting on horizontal or vertical DIN rail

Material specifications

Color (Housing)	gray (RAL 7042)

Interfaces

Axioline F local bus

Number of interfaces	2
Connection method	Bus base module
Transmission speed	100 Mbps

Smart Element interface

Number of interfaces	6
Connection method	Card edge connector

Product properties

Product type	I/O component
Product family	Axioline F
Type	block modular
Mounting position	Panel mounting on horizontal or vertical DIN rail
Special properties	The product is being prepared for compliance with the Cyber Resilience Act (CRA)
	6 slots for Axioline Smart Elements

Insulation characteristics

Overvoltage category	II (IEC 60664-1, EN 60664-1)
Pollution degree	2 (IEC 60664-1, EN 60664-1)

Electrical properties

Maximum power dissipation for nominal condition	0.85 W

Potentials: Axioline F local bus supply (U_{Bus})

Supply voltage	5 V DC

Potentials: Communications power supply of the Smart Elements (U_{SE})

Supply voltage	3.3 V DC (using card edge connectors)

Potentials: I/O supply feed-in (U_P)

Supply voltage	24 V DC
Supply voltage range	19.2 V DC ... 30 V DC (including all tolerances, including ripple)
Current draw	max. 16 A (provide external protection)
	Applications with UL approval: max. 12 A or max. 16 A (see UL specifications on the housing; use external fuses)
Current consumption	min. 1.5 mA (without connected Smart Elements, with nominal voltage)
Protective circuit	Surge protection; Suppressor diode
Protection	max. 16 A
	Applications with UL approval: max. 12 A or max. 16 A (see UL specifications on the housing)

Electrical isolation/isolation of the voltage ranges

Test voltage: 5 V supply of the local bus (U_{Bus}) / 24 V supply (I/Os)	500 V AC, 50 Hz, 1 min
Test voltage: 5 V supply of the local bus (U_{Bus}) / functional ground	500 V AC, 50 Hz, 1 min
Test voltage: 24 V supply (I/O) / functional ground	500 V AC, 50 Hz, 1 min

Connection data

Connection technology

Connection name	I/O supply feed-in (U_P)
Note on the connection method	Please observe the information provided on conductor cross-sections in the “Axioline F: system and installation” user manual.

I/O supply feed-in (U_P)

Connection method	Push-in connection
Note on the connection method	Please observe the information provided on conductor cross-sections in the “Axioline F: system and installation” user manual.
Conductor cross-section, rigid	0.5 mm² ... 2.5 mm²
Conductor cross-section, flexible	0.5 mm² ... 2.5 mm²
Conductor cross-section AWG	20 ... 14
Stripping length	8 mm

Environmental and real-life conditions

Ambient conditions

Ambient temperature (operation)	-25 °C ... 60 °C
Degree of protection	IP20
Air pressure (operation)	70 kPa ... 106 kPa (up to 3000 m above sea level)
Air pressure (storage/transport)	70 kPa ... 106 kPa (up to 3000 m above sea level)
Ambient temperature (storage/transport)	-40 °C ... 85 °C
Permissible humidity (operation)	5 % ... 95 % (non-condensing)
Permissible humidity (storage/transport)	5 % ... 95 % (non-condensing)

Mechanical test

Vibration resistance in accordance with EN 60068-2-6/IEC 60068-2-6	5g
Shock in accordance with EN 60068-2-27/IEC 60068-2-27	30g
Continuous shock in accordance with EN 60068-2-27/IEC 60068-2-27	10g

Standards and regulations

Protection class	III (IEC 61140, EN 61140, VDE 0140-1)

Drawings

Dimensional drawing

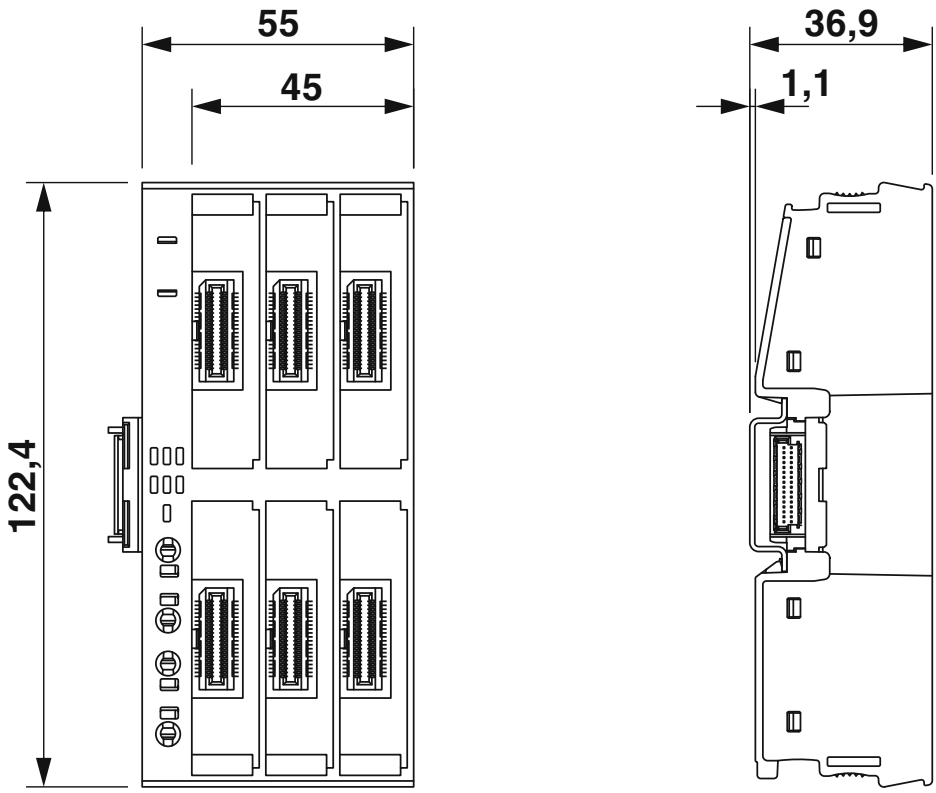

Dimensions (in mm)

Dimensional drawing

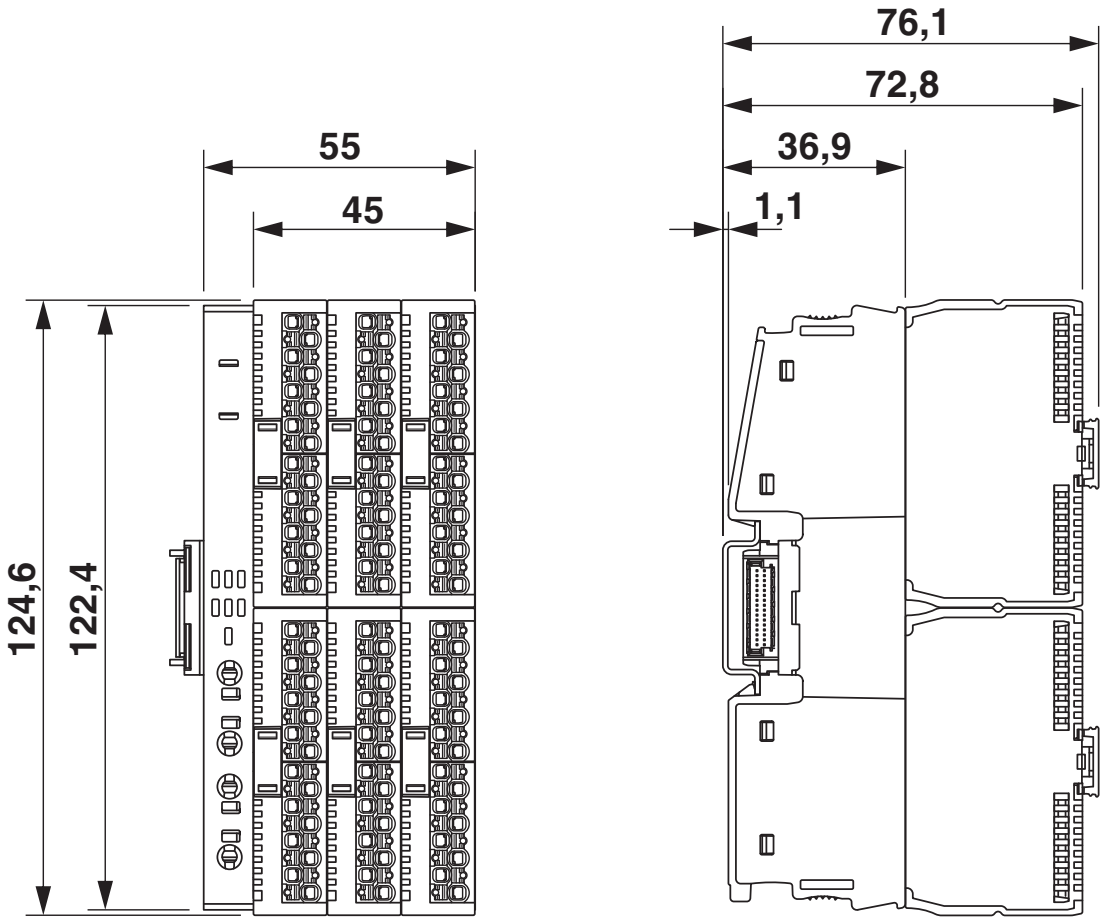

Dimensions (in mm) with attached Axioline Smart Elements

Connection diagram

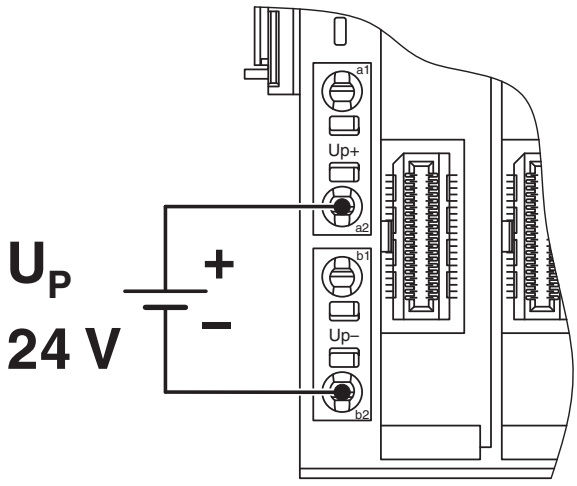

Connection example

Block diagram

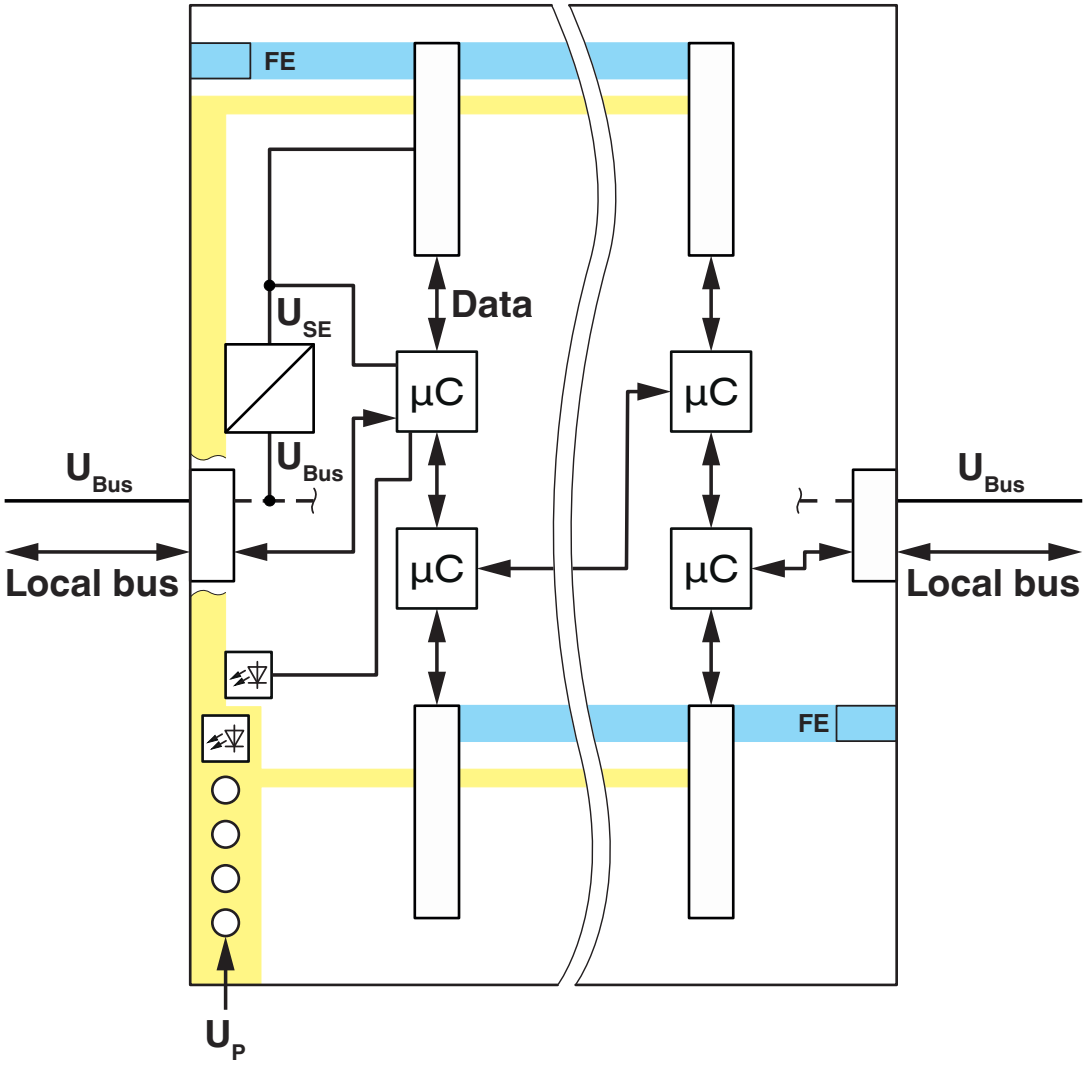

Basic circuit diagram

Approvals

To download certificates, visit the product detail page: https://www.phoenixcontact.com/us/products/1088136

cULus Listed
Approval ID: E238705

FS Thermoprocess
Approval ID: 968 INS 799.01 25

cULus Listed
Approval ID: E238705

FS Thermoprocess
Approval ID: 968 INS 799.01 25

Classifications

ECLASS

ECLASS-13.0	27242610
ECLASS-15.0	27242610

ETIM

ETIM 10.0	EC001600

UNSPSC

UNSPSC 21.0	32151600

Environmental product compliance

EU RoHS

Fulfills EU RoHS substance requirements	Yes
Exemption	7(a), 7(c)-I

China RoHS

Environment friendly use period (EFUP)	EFUP-50
	An article-related China RoHS declaration table can be found in the download area for the respective article under "Manufacturer declaration". For all articles with EFUP-E, no China RoHS declaration table issued and required.

EU REACH SVHC

REACH candidate substance (CAS No.)	Lead(CAS: 7439-92-1)
SCIP	efd2dda2-22ee-4e59-8dae-e59e3f0bbbde

EF3.1 Climate Change

CO2e kg	6.121 kg CO2e

Phoenix Contact 2026 © - all rights reserved
https://www.phoenixcontact.com

Phoenix Contact USA
586 Fulling Mill Road
Middletown, PA 17057, United States
(+717) 944-1300
info@phoenixcon.com