# AXL F BP SE4 - Module carrier

1088135

https://www.phoenixcontact.com/us/products/1088135

Please be informed that the data shown in this PDF document is generated from our online catalog. Please find the complete data in the user documentation. Our general terms of use for downloads are valid.

CRA-READY

Axioline F, Backplane, 4 slots for Axioline Smart Elements, transmission speed in the local bus: 100 Mbps, degree of protection: IP20; The product is being prepared for compliance with the Cyber Resilience Act (CRA).

## Product description

The Axioline F backplane is intended for use in a station that is opened by an Axioline F bus coupler or an Axiocontrol. The backplane has four “Smart Element Interface” slots to accept Axioline Smart Elements.

## Your advantages

- Preparing the communications power supply for the plugged-in Axioline Smart Elements
- Supply feed-in for the peripheral supply U<sub>P</sub> for the plugged in Axioline Smart Elements

ELEKTROGERÄTE RÜCKNAHME

## Commercial data

| | |
|---|---|
| Item number | 1088135 |
| Packing unit | 1 pc |
| Minimum order quantity | 1 pc |
| Sales key | DR05 |
| Product key | DRIBU1 |

| | |
|---|---|
| GTIN | 4055626887487 |
| Weight per piece (including packing) | 92.42 g |
| Weight per piece (excluding packing) | 86.85 g |
| Customs tariff number | 85389091 |
| Country of origin | DE |

## Technical data

### Dimensions

| | |
|---|---|
| Dimensional drawing | 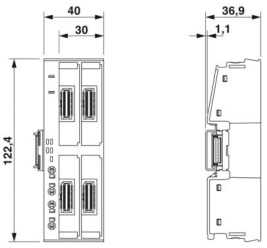 |
| Width | 40 mm |
| Height | 122.4 mm |
| Depth | 36.9 mm |
| Note on dimensions | The depth applies when a TH 35-7.5 DIN rail is used (in accordance with EN 60715). |
| Complete module width | 40 mm |
| Complete module height | 124.6 mm |
| Complete module depth | 76.1 mm |
| Note | The depth applies when a TH 35-7.5 DIN rail is used (in accordance with EN 60715). |

### Notes

| | |
|---|---|
| Note on application | Only for industrial use |
| Note on application | As things stand now, we are preparing the product so that, as of December 11, 2027, it will comply with the requirements of the EU Cyber Resilience Act (CRA) based on the information currently available regarding the CRA. |

### Mounting

| | |
|---|---|
| Mounting type | DIN rail mounting |
| Mounting position | Panel mounting on horizontal or vertical DIN rail |

### Material specifications

| | |
|---|---|
| Color (Housing) | gray (RAL 7042) |

### Interfaces

#### Axioline F local bus

| | |
|---|---|
| Number of interfaces | 2 |
| Connection method | Bus base module |
| Transmission speed | 100 Mbps |

#### Smart Element interface

| | |
|---|---|
| Number of interfaces | 4 |
| Connection method | Card edge connector |

## Product properties

| | |
|---|---|
| Product type | I/O component |
| Product family | Axioline F |
| Type | block modular |
| Mounting position | Panel mounting on horizontal or vertical DIN rail |
| Special properties | The product is being prepared for compliance with the Cyber Resilience Act (CRA) |
| | 4 slots for Axioline Smart Elements |

Insulation characteristics

| | |
|---|---|
| Overvoltage category | II (IEC 60664-1, EN 60664-1) |
| Pollution degree | 2 (IEC 60664-1, EN 60664-1) |

## Electrical properties

| | |
|---|---|
| Maximum power dissipation for nominal condition | 0.6 W |

Potentials: Axioline F local bus supply ($U_{Bus}$)

| | |
|---|---|
| Supply voltage | 5 V DC |

Potentials: Communications power supply of the Smart Elements ($U_{SE}$)

| | |
|---|---|
| Supply voltage | 3.3 V DC (using card edge connectors) |

Potentials: I/O supply feed-in ($U_P$)

| | |
|---|---|
| Supply voltage | 24 V DC |
| Supply voltage range | 19.2 V DC ... 30 V DC (including all tolerances, including ripple) |
| Current draw | max. 16 A (provide external protection) |
| | Applications with UL approval: max. 12 A or max. 16 A (see UL specifications on the housing; use external fuses) |
| Current consumption | min. 1.5 mA (without connected Smart Elements, with nominal voltage) |
| Protective circuit | Surge protection; Suppressor diode |
| Protection | max. 16 A |
| | Applications with UL approval: max. 12 A or max. 16 A (see UL specifications on the housing) |

Electrical isolation/isolation of the voltage ranges

| | |
|---|---|
| Test voltage: 5 V supply of the local bus ($U_{Bus}$) / 24 V supply (I/Os) | 500 V AC, 50 Hz, 1 min |
| Test voltage: 5 V supply of the local bus ($U_{Bus}$) / functional ground | 500 V AC, 50 Hz, 1 min |
| Test voltage: 24 V supply (I/O) / functional ground | 500 V AC, 50 Hz, 1 min |

## Connection data

Connection technology

| | |
|---|---|
| Connection name | I/O supply feed-in ($U_P$) |
| Note on the connection method | Please observe the information provided on conductor cross-sections in the “Axioline F: system and installation” user manual. |

I/O supply feed-in ($U_P$)

| | |
|---|---|
| Connection method | Push-in connection |
| Note on the connection method | Please observe the information provided on conductor cross-sections in the “Axioline F: system and installation” user manual. |
| Conductor cross-section, rigid | 0.5 mm² ... 2.5 mm² |
| Conductor cross-section, flexible | 0.5 mm² ... 2.5 mm² |
| Conductor cross-section AWG | 20 ... 14 |
| Stripping length | 8 mm |

## Environmental and real-life conditions

Ambient conditions

| | |
|---|---|
| Ambient temperature (operation) | -25 °C ... 60 °C |
| Degree of protection | IP20 |
| Air pressure (operation) | 70 kPa ... 106 kPa (up to 3000 m above sea level) |
| Air pressure (storage/transport) | 70 kPa ... 106 kPa (up to 3000 m above sea level) |
| Ambient temperature (storage/transport) | -40 °C ... 85 °C |
| Permissible humidity (operation) | 5 % ... 95 % (non-condensing) |
| Permissible humidity (storage/transport) | 5 % ... 95 % (non-condensing) |

Mechanical test

| | |
|---|---|
| Vibration resistance in accordance with EN 60068-2-6/IEC 60068-2-6 | 5g |
| Shock in accordance with EN 60068-2-27/IEC 60068-2-27 | 30g |
| Continuous shock in accordance with EN 60068-2-27/IEC 60068-2-27 | 10g |

## Standards and regulations

| | |
|---|---|
| Protection class | III (IEC 61140, EN 61140, VDE 0140-1) |

## Drawings

Dimensional drawing

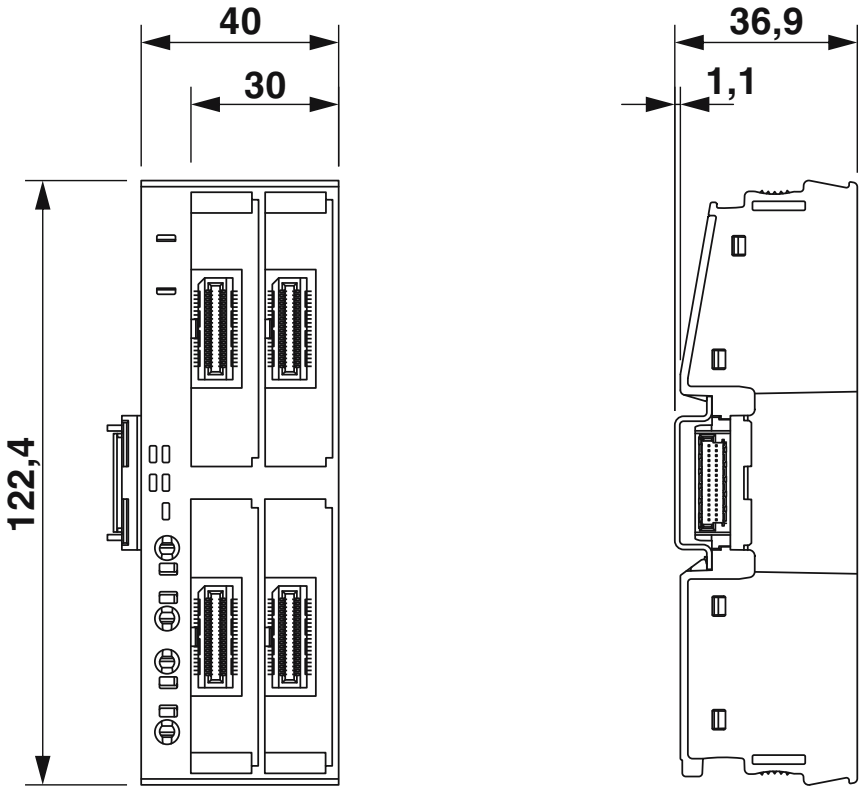


Dimensions (in mm)

Dimensional drawing

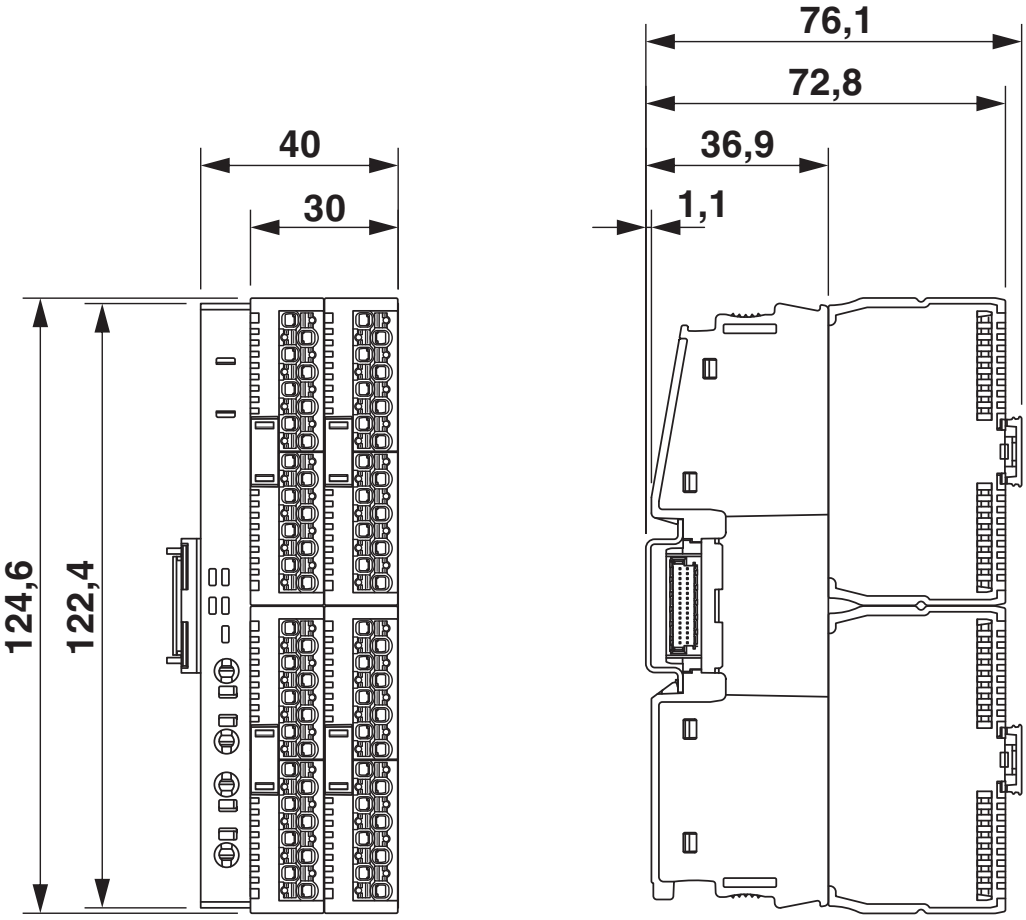


Dimensions (in mm) with attached Axioline Smart Elements

Connection diagram

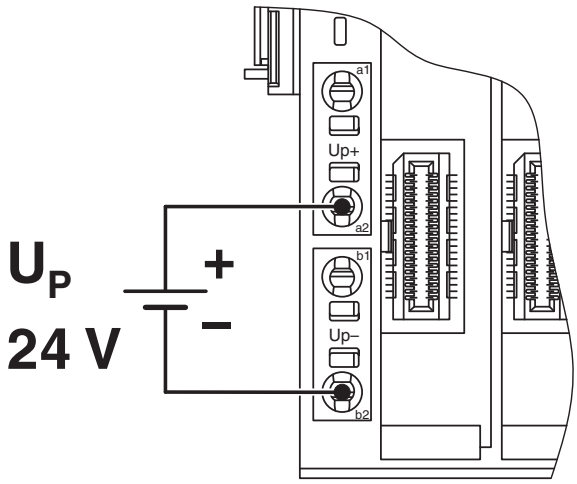


Connection example

Block diagram

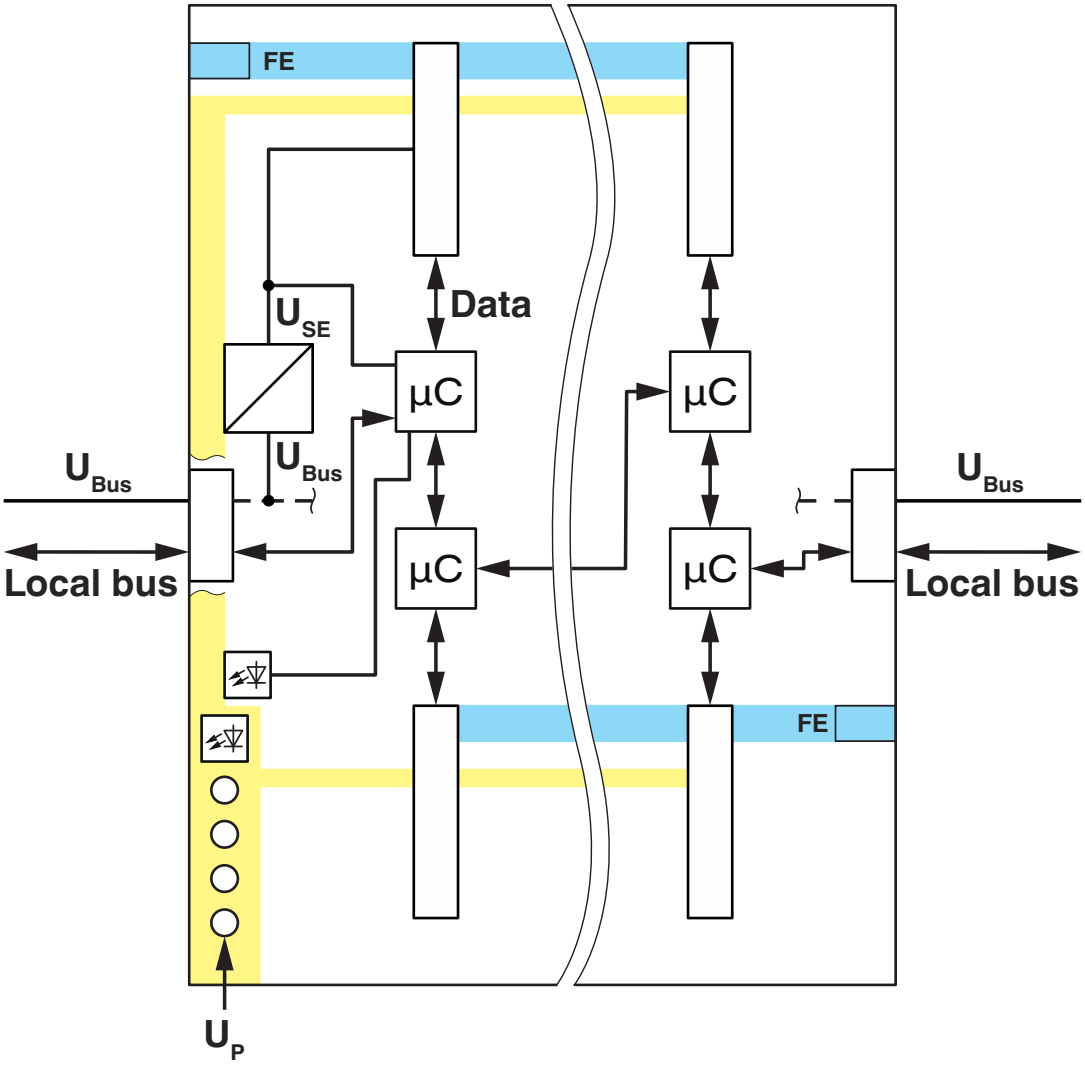


Basic circuit diagram

## Approvals

To download certificates, visit the product detail page: https://www.phoenixcontact.com/us/products/1088135

**cULus Listed**
Approval ID: E238705

**FS Thermoprocess**
Approval ID: 968 INS 799.01 25


**cULus Listed**
Approval ID: E238705

**FS Thermoprocess**
Approval ID: 968 INS 799.01 25

## Classifications

### ECLASS

| | |
|---|---|
| ECLASS-13.0 | 27242610 |
| ECLASS-15.0 | 27242610 |

### ETIM

| | |
|---|---|
| ETIM 10.0 | EC001600 |

### UNSPSC

| | |
|---|---|
| UNSPSC 21.0 | 32151600 |

## Environmental product compliance

EU RoHS

| | |
|---|---|
| Fulfills EU RoHS substance requirements | Yes |
| Exemption | 7(a), 7(c)-I |

China RoHS

| | |
|---|---|
| Environment friendly use period (EFUP) | EFUP-50 |
| | An article-related China RoHS declaration table can be found in the download area for the respective article under "Manufacturer declaration". For all articles with EFUP-E, no China RoHS declaration table issued and required. |

EU REACH SVHC

| | |
|---|---|
| REACH candidate substance (CAS No.) | Lead(CAS: 7439-92-1) |
| SCIP | aa4ef70b-2445-4e85-95a9-9f7127084e2f |


Phoenix Contact 2026 © - all rights reserved
https://www.phoenixcontact.com



Phoenix Contact USA
586 Fulling Mill Road
Middletown, PA 17057, United States
(+717) 944-1300
info@phoenixcon.com