HC-COM-Q08-I-PT-F - Contact insert

1079554

https://www.phoenixcontact.com/us/products/1079554

Please be informed that the data shown in this PDF document is generated from our online catalog. Please find the complete data in the user documentation. Our general terms of use for downloads are valid.



Contact insert, number of positions: 8+PE, size: COM, power contacts: 8, control contacts: 0, number of connections per position: 1, Socket, Push-in connection, 320 V, 16 A, 0.5 mm^2 ... 2.5 mm^2, application: Power

Product description

Contact insert, incl. 4 mounting screws

Your advantages

- Easy installation without tools, even when mounted, with push-in connection technology
- Shortest installation time compared to other connection technologies
- Quick and effortless wiring, in particular when space is tight
- Automatic cabling with robots possible
- Safe wiring and operation with color-coded actuators
- Shock and vibration-resistant in accordance with DIN EN 61373
- Cost-effective and fast coding with plastic profiles

Commercial data

Item number	1079554
Packing unit	1 pc
Minimum order quantity	1 pc
Sales key	BF61
Product key	AF7ABH
GTIN	4055626800325
Weight per piece (including packing)	36.6 g
Weight per piece (excluding packing)	36 g
Customs tariff number	85366990
Country of origin	CN

Technical data

Notes

General	for flexible conductors with or without ferrules
General	Connectors may be operated only when there is no load/voltage.
General	Flexible conductors may be used without ferrules as long as they comply with IEC 60228 Class 1 ... 5. The individual litz wires must have a min. diameter of 0.17 mm.

Mounting

Assembly note	To ensure correct use, installation in housing with IP54 protection or better is required

Product properties

Product type	Contact insert with a fixed no. of positions
Series	HC-COM
Application	Power
Type	COM
Number of positions	8
Connection profile	8+PE
Contact numbering	1 - 8
Number of connections per position	1
No. of power contacts	8
No. of control contacts	0
Contact material type	turned

Insulation characteristics

Overvoltage category	III
Degree of pollution	3

Dimensions

Dimensional drawing	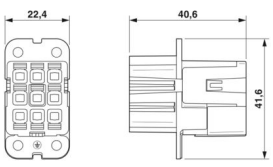
Width	25.6 mm
Height	48.05 mm
Length	45 mm

Mechanical characteristics

Contact diameter	2.5 mm

Connection data

Connection technology

Connection technology	Push-in connection
Number of connections per position	1
Connection in acc. with standard	IEC / EN

Conductor connection

Conductor cross-section	0.5 mm² ... 2.5 mm²
Connection cross section AWG	20 ... 14
Stripping length of the individual wire	10 mm (Power)

Electrical properties

Rated voltage (III/2) contacts	500 V
Rated voltage (III/3)	320 V
Rated voltage for power contacts	500
Rated surge voltage	6 kV
Rated current	16 A

Mechanical properties

Mechanical data

Insertion/withdrawal cycles	≥ 500

Material specifications

Flammability rating according to UL 94	V0
Contact material	Copper alloy
Contact surface material	Ag
Contact carrier material	PC

Environmental and real-life conditions

Ambient conditions

Ambient temperature (operation)	-40 °C ... 125 °C (including heating up of contacts)

Standards and regulations

Standards/regulations	PC: Fire protection in rail vehicles - requirement sets R22, R23, and R24 acc. to DIN EN 45545-2 (Risk level HL1 - HL3)

Drawings

Dimensional drawing

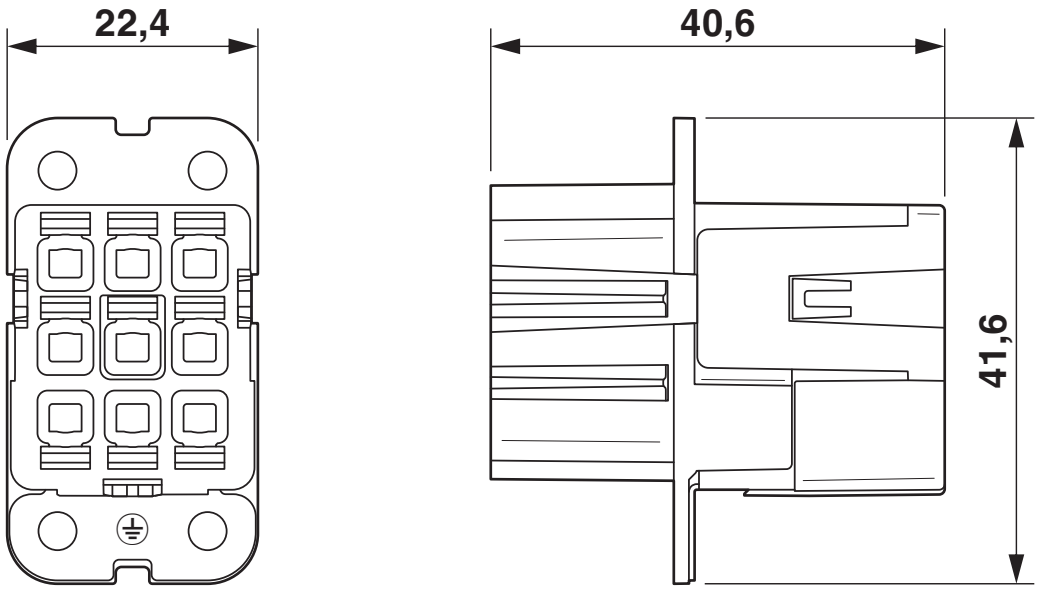

Dimensional drawing

Diagram

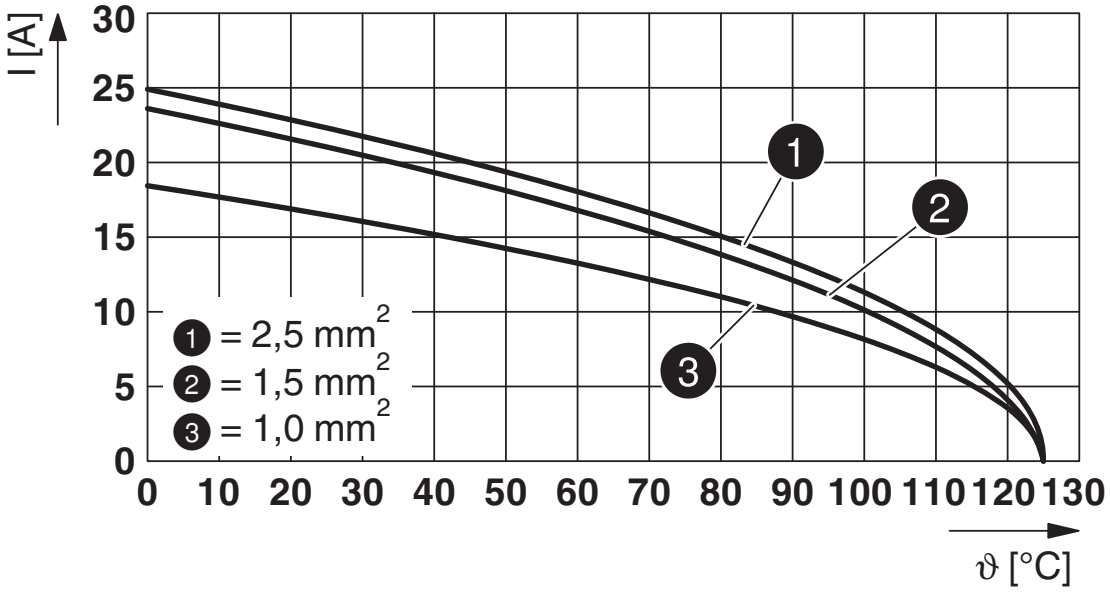

Derating diagram

Approvals

To download certificates, visit the product detail page: https://www.phoenixcontact.com/us/products/1079554

UL Recognized
Approval ID: E468743

	Nominal voltage U_N	Nominal current I_N	Cross section AWG	Cross section mm^2
keine				
	600 V	20 A	- 14	-

Classifications

ECLASS

ECLASS-13.0	27440205
ECLASS-15.0	27440205

ETIM

ETIM 10.0	EC000438

UNSPSC

UNSPSC 21.0	39121500

Environmental product compliance

EU RoHS

Fulfills EU RoHS substance requirements	Yes, No exemptions

China RoHS

Environment friendly use period (EFUP)	EFUP-E
	No hazardous substances above the limits

EU REACH SVHC

REACH candidate substance (CAS No.)	No substance above 0.1 wt%

Phoenix Contact 2026 © - all rights reserved
https://www.phoenixcontact.com

Phoenix Contact USA
586 Fulling Mill Road
Middletown, PA 17057, United States
(+717) 944-1300
info@phoenixcon.com