HC-COM-BCFS-PL-BK - Protective cover

1079396

https://www.phoenixcontact.com/us/products/1079396

Please be informed that the data shown in this PDF document is generated from our online catalog. Please find the complete data in the user documentation. Our general terms of use for downloads are valid.



Protective cover COM, for single locking latch, protective cover material: PA, height: 24.5 mm, seal: no, Standard, for pin inserts

Commercial data

Item number	1079396
Packing unit	1 pc
Minimum order quantity	1 pc
Sales key	BF66
Product key	AF7AZC
GTIN	4055626799223
Weight per piece (including packing)	16.1 g
Weight per piece (excluding packing)	15 g
Customs tariff number	39269097
Country of origin	CN

Technical data

Product properties

Product type	Protective cover
Housing type	Protective cover
Series	HC-COM
Application	Standard
Type	COM
Retaining cord present	yes
Seal present	no

Dimensions

Dimensional drawing	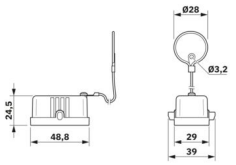
Width	39 mm
Height	24.5 mm
Length	48.8 mm
Diameter	28 mm

Material specifications

Material Protective cover	PA
Flammability rating according to UL 94	V0
Material, protective cover	PA

Mechanical properties

Mechanical data

Locking type	Pin

Environmental and real-life conditions

Ambient conditions

Ambient temperature (operation)	-40 °C ... 125 °C

Drawings

Dimensional drawing

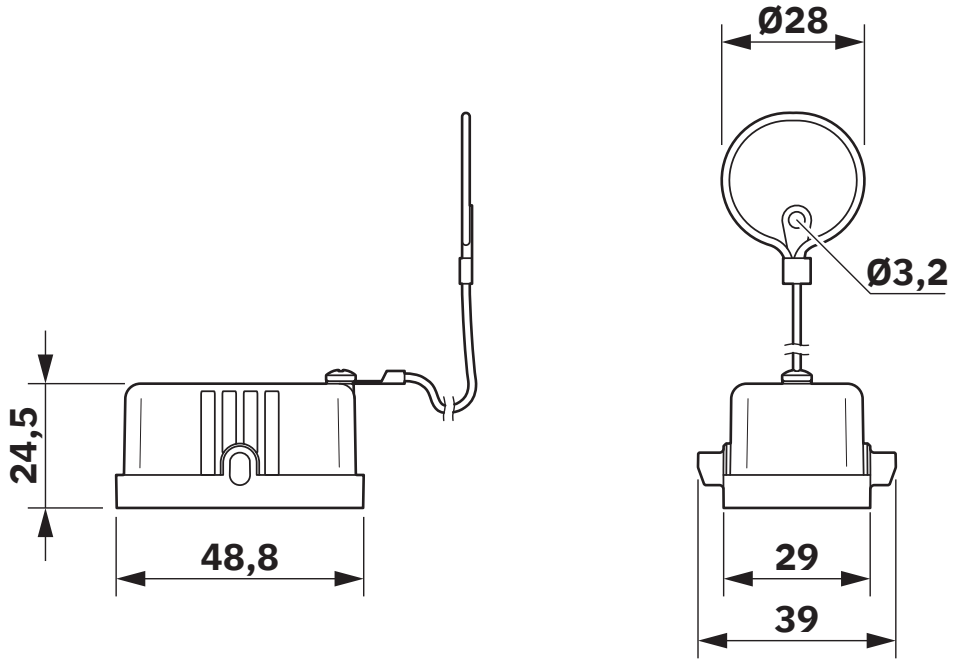

Dimensional drawing

Approvals

To download certificates, visit the product detail page: https://www.phoenixcontact.com/us/products/1079396

cULus Recognized
Approval ID: E468743

cUL Recognized
Approval ID: E255026

UL Recognized
Approval ID: E255026

Classifications

ECLASS

ECLASS-13.0	27440208
ECLASS-15.0	27440208

ETIM

ETIM 10.0	EC002314

UNSPSC

UNSPSC 21.0	39121400

Environmental product compliance

EU RoHS

Fulfills EU RoHS substance requirements	Yes, No exemptions

China RoHS

Environment friendly use period (EFUP)	EFUP-E
	No hazardous substances above the limits

EU REACH SVHC

REACH candidate substance (CAS No.)	No substance above 0.1 wt%

Phoenix Contact 2026 © - all rights reserved
https://www.phoenixcontact.com

Phoenix Contact USA
586 Fulling Mill Road
Middletown, PA 17057, United States
(+717) 944-1300
info@phoenixcon.com