HC-COM-BWS-EL-AL - Housing

1078594

https://www.phoenixcontact.com/us/products/1078594

Please be informed that the data shown in this PDF document is generated from our online catalog. Please find the complete data in the user documentation. Our general terms of use for downloads are valid.

Panel mounting base COM, with single locking latch, material: Die-cast aluminum, salt water resistant, height: 19.8 mm, cable gland: none, Standard

Your advantages

- Good shielding in the event of electromagnetic interference

Commercial data

Item number	1078594
Packing unit	1 pc
Minimum order quantity	1 pc
Sales key	BF59
Product key	AF7APP
GTIN	4055626794129
Weight per piece (including packing)	25.5 g
Weight per piece (excluding packing)	25 g
Customs tariff number	76169990
Country of origin	CN

Technical data

Product properties

Product type	Housing with locking latch
Housing type	Panel mounting base
Product family	HC-COM
Application	Standard
Type	COM
Pg screw connection	none

Dimensions

Dimensional drawing	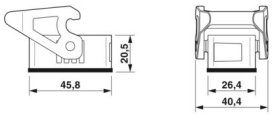
Width	39 mm
Height	19.8 mm
Length	45.8 mm
Hole diameter	3.5 mm

Installation dimensions

Width of the assembly cutout	22.7 mm
Length of the assembly cutout	26.5 mm

Material specifications

Flammability rating according to UL 94	V0 (Interlock)
Seal material Flat gasket	NBR, conductive
Housing material	Die-cast aluminum, salt water resistant
Locking latch material	PA

Mechanical properties

Mechanical data

Locking type	Latch

Connection data

Tightening torque	0.5 Nm ... 0.8 Nm (For M3 mounting screws on the panel-mount base)

Environmental and real-life conditions

Ambient conditions

Degree of protection	IP66
Impact strength	IK06
Ambient temperature (operation)	-40 °C ... 125 °C

Drawings

Dimensional drawing

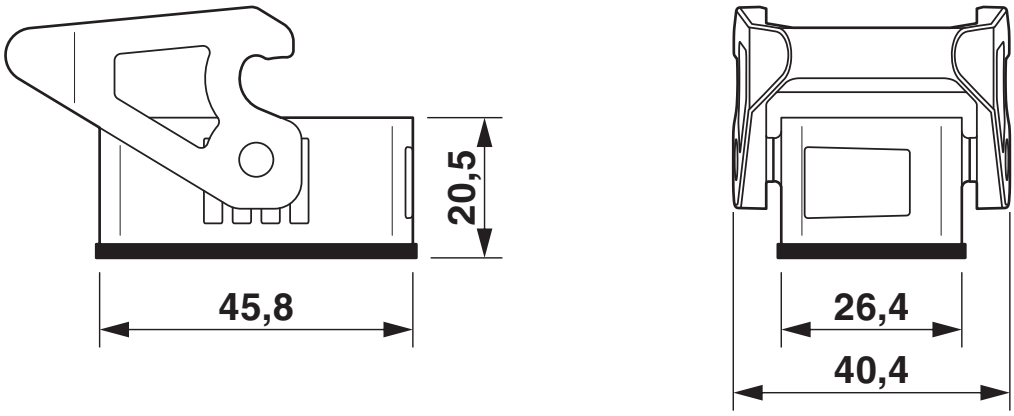

Dimensional drawing

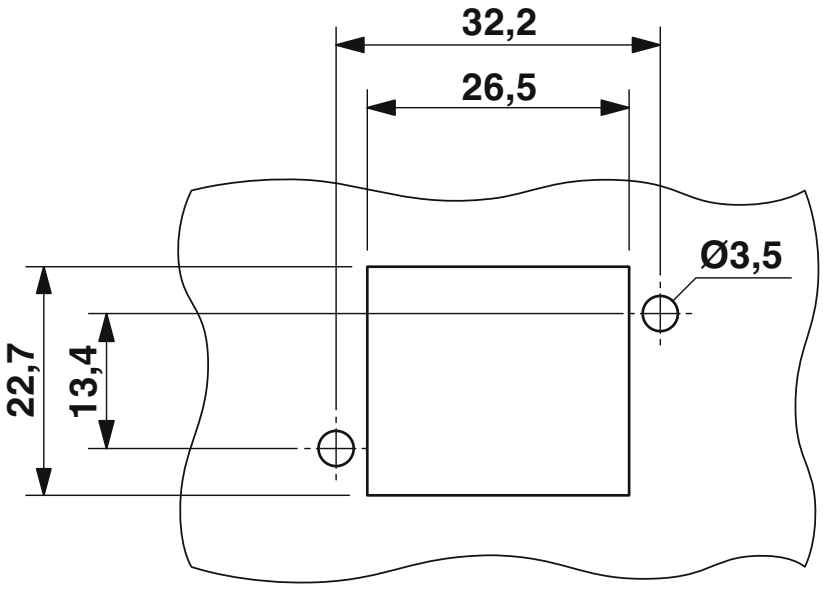

Mounting cutout

Approvals

To download certificates, visit the product detail page: https://www.phoenixcontact.com/us/products/1078594

cUL Recognized
Approval ID: E255026

UL Recognized
Approval ID: E255026

Classifications

ECLASS

ECLASS-13.0	27440202
ECLASS-15.0	27440202

ETIM

ETIM 10.0	EC000437

UNSPSC

UNSPSC 21.0	31261500

Environmental product compliance

EU RoHS

Fulfills EU RoHS substance requirements	Yes, No exemptions

China RoHS

Environment friendly use period (EFUP)	EFUP-E
	No hazardous substances above the limits

EU REACH SVHC

REACH candidate substance (CAS No.)	No substance above 0.1 wt%

EF3.1 Climate Change

CO2e kg	4.057 kg CO2e

Phoenix Contact 2026 © - all rights reserved
https://www.phoenixcontact.com

Phoenix Contact USA
586 Fulling Mill Road
Middletown, PA 17057, United States
(+717) 944-1300
info@phoenixcon.com