MACX MCR-EX-RTD-I - Temperature measuring transducer

1050222

https://www.phoenixcontact.com/us/products/1050222

Please be informed that the data shown in this PDF document is generated from our online catalog. Please find the complete data in the user documentation. Our general terms of use for downloads are valid.

CRA-READY



Ex i temperature transducer: converts signals from resistance temperature detectors installed in the Ex area and transmits a 0/4 - 20 mA signal to a load in the safe area. Freely programmable. 3-way isolation, SIL, screw connection, standard configuration.

Your advantages

- Power supply possible via DIN rail connector
- Programming during operation with Ex measuring circuit connected and also voltage-free using IFS-USB-PROG-ADAPTER programming adapter
- Input for resistance thermometers and resistance-type sensors, [Ex ia] IIC
- Installation in zone 2, protection type "ec" (EN 60079-7) permitted
- 3-way electrical isolation
- Status indicator for supply voltage, cable, sensor, and module errors
- Configuration via software (FDT/DTM): sensor type, connection technology, measuring range, measuring unit, filter, alarm signal, and output range
- Output: 0 mA ... 20 mA or 4 mA ... 20 mA

Commercial data

Item number	1050222
Packing unit	1 pc
Minimum order quantity	1 pc
Sales key	C430
Product key	DK1215
GTIN	4055626666075
Weight per piece (including packing)	175 g
Weight per piece (excluding packing)	130 g
Customs tariff number	85437090
Country of origin	DE

Technical data

Notes

Note on application

Note on application	As things stand now, we are preparing the product so that, as of December 11, 2027, it will comply with the requirements of the EU Cyber Resilience Act (CRA) based on the information currently available regarding the CRA.

Utilization restriction

EMC note	EMC: class A product, see manufacturer's declaration in the download area

Product properties

Product type	Temperature transmitter
Product family	MACX Analog
Application	Temperature
No. of channels	1
Configuration	Software

System properties

Functionality

Configuration	Software

Electrical properties

Electrical isolation	3-way isolation
Electrical isolation between input and output	yes
Step response (0–99%)	≤ 1.7 s (with filter factor = 1)
Temperature coefficient, typical	0.01 %/K
Transmission error, typical	0.1 % (e.g. for Pt 100, 300 K span, 4 ... 20 mA)

Electrical isolation

Test voltage	2.5 kV AC (50 Hz, 60 s)
Overvoltage category	II
Pollution degree	2

Electrical isolation Input/output/power supply IEC/EN 61010-1

Standards/regulations	IEC/EN 61010-1
Rated insulation voltage	300 V_{rms}
Insulation	Safe isolation

Electrical isolation Input/output IEC/EN 60079-11

Standards/regulations	IEC/EN 60079-11
Rated insulation voltage	375 V_{PP}

Electrical isolation Input/power supply IEC/EN 60079-11

Standards/regulations	IEC/EN 60079-11
Rated insulation voltage	375 V_{PP}

Supply

Nominal supply voltage	24 V DC -20 % ... +25 %
Supply voltage range	19.2 V DC ... 30 V DC
Power dissipation	≤ 0.76 W
Power consumption	≤ 1 W

Input data

Measurement

Description of the input	intrinsically safe
Sensor types (RTD) that can be used	Pt, Ni, Cu sensors: 2, 3, 4-wire
Temperature measuring range	-200 °C ... 850 °C (Range depending on the sensor type)
Linear resistance measuring range	0 Ω ... 50 kΩ
Potentiometer resistance range	0 Ω ... 50 kΩ
Max. permissible overall conductor resistance	50 Ω (Per cable)
Sensor input current	10 µA ... 210 µA (Up to 2x 210 µA with 3-conductor technology)
Temperature measuring range	≥ 50 K

Output data

Signal: Current

Number of outputs	1
Configurable/programmable	Yes
Current output signal	0 mA ... 20 mA
	4 mA ... 20 mA (SIL)
Max. current output signal	≥ 21 mA
Load/output load current output	≤ 600 Ω
Output ripple (current)	< 15 μA_{PP}
	< 10 μA_{rms}
Behavior in the event of a sensor error	Freely definable

Connection data

Connection method	Screw connection
Stripping length	7 mm
Screw thread	M3
Conductor cross-section rigid	0.2 mm² ... 2.5 mm²
Conductor cross-section flexible	0.2 mm² ... 2.5 mm²
Conductor cross-section AWG	24 ... 14
Tightening torque	0.5 Nm ... 0.6 Nm

Test socket

Max. diameter	2 mm

Ex data

Ex installation (EPL)	Gc
	Div. 2
Ex i circuits (EPL)	[Ga]
	[Da]
	[Ma]
	[Div. 1]

Safety data: Terminals: 4.1, 4.2, 5.1, 5.2

Max. internal capacitance C_i	44 nF
Max. output voltage U_o	6 V
Max. output current I_o	16.6 mA (RTD in 4-conductor technology)
	13 mA (RTD in 3-conductor technology)
	7.1 mA (RTD in 2-conductor technology)
	16.6 mA (2x RTD in 2-conductor technology)
	13 mA (Potentiometer)
Max. output power P_o	25.2 mW (Linear)
Safety-related maximum voltage U_m	253 V AC
	125 V DC
	30 V DC (Zone 2: 3.1, 3.2)
IIA/I (simple circuit): Max. external inductivity L_o / Max. external capacitance C_o	850 mH / 1000 µF
IIB/IIIC (simple circuit): Max. external inductivity L_o / Max. external capacitance C_o	460 mH / 1000 µF
IIC (simple circuit): Max. external inductivity L_o / Max. external capacitance C_o	100 mH / 40 µF
IIB/IIA (mixed circuit): Max. external inductivity L_o / Max. external capacitance C_o	100 mH / 950 nF
IIIC/I (mixed circuit): Max. external inductivity L_o / Max. external capacitance C_o	100 mH / 950 nF
IIC (mixed circuit): Max. external inductivity L_o / Max. external capacitance C_o	100 mH / 555 nF

Signaling

Status display	Green LED (supply voltage)
	Red LED, flashing 2.8 Hz (cable error, sensor error on input or output, ERR)
	Red LED, flashing 1.2 Hz (simulation mode, ERR)
	Red LED, permanently on (module error, ERR)

Dimensions

Dimensional drawing	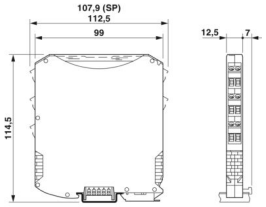
Width	12.5 mm
Height	112.5 mm
Depth	113.7 mm
Depth NS 35/7,5	114.5 mm (Snapped onto DIN rail NS 35/7,5 in accordance with EN 60715)

Material specifications

Color	gray (RAL 7042)
Flammability rating according to UL 94 (Housing)	V0 (Housing)
Housing material	PA 6.6-FR

Environmental and real-life conditions

Ambient conditions

Degree of protection	IP20
Ambient temperature (operation)	-40 °C ... 70 °C (Any mounting position)
Ambient temperature (storage/transport)	-40 °C ... 80 °C
Permissible humidity (operation)	5 % ... 95 % (non-condensing)

Altitude range (≤ 2000 m)

Altitude	≤ 2000 m (The technical data refers to altitudes ≤2000 m above mean sea level. For altitudes >2000 m above mean sea level, refer to the data sheet.)
Ambient temperature (operation)	-40 °C ... 70 °C
Test voltage	2.5 kV
Rated insulation voltage	300 V_{rms} (IEC/EN 60079-11)
	375 V_{PP} (IEC/EN 60079-11)

Altitude range (≤ 3000 m)

Height range	> 2000 m ... 3000 m
Ambient temperature (operation)	-40 °C ... 60 °C
Test voltage	2.25 kV
Safety-related maximum voltage U_m	190 V AC
	110 V DC
Rated insulation voltage	190 V_{rms} (IEC/EN 60079-11)

Altitude range (≤ 4000 m)

Height range	> 3000 m ... 4000 m
Ambient temperature (operation)	-40 °C ... 55 °C
Test voltage	2 kV

Safety-related maximum voltage U_m	60 V AC/DC
Rated insulation voltage	60 V_{rms} (IEC/EN 60079-11)

Altitude range (≤ 5000 m)

Height range	> 4000 m ... 5000 m
Ambient temperature (operation)	-40 °C ... 49 °C
Test voltage	1.75 kV
Safety-related maximum voltage U_m	60 V AC/DC
Rated insulation voltage	60 V_{rms} (IEC/EN 60079-11)

Approvals

CE

Certificate	CE-compliant
Note	and EN 61326

ATEX

Identification	Ⓔx I (M1) [Ex ia Ma] I
	Ⓔx II (1) G [Ex ia Ga] IIC
	Ⓔx II (1) D [Ex ia Da] IIIC
	Ⓔx II 3(1) G Ex ec ic [ia Ga] IIC T4 Gc
Certificate	IBExU19ATEX1006 X

IECEx

Identification	[Ex ia Ma] I
	[Ex ia Ga] IIC
	[Ex ia Da] IIIC
	Ex ec ic [ia Ga] IIC T4 Gc
Certificate	IECEx IBE 19.0001 X

UL, USA/Canada

Identification	UL 61010 Listed
	Class I Div 2; IS for Class I, II, III Div 1
Certificate	cULus C.D.-No 83104549

Shipbuilding approval

Certificate	DNV GL TAA00000AG

Safety Integrity Level (SIL, IEC 61508)

Identification	2
Certificate	SEBS-A.150520/17, V2.0

Systematic Capability

Identification	2

INMETRO

Identification	[Ex ia Ma] I
	[Ex ia Ga] IIC

	[Ex ia Da] IIIC
	Ex ec ic [ia Ga] IIC T4 Gc
Certificate	DNV 21.0064 X

EAC Ex

Identification	Ex ec ic [ia Ga] IIC T4 Gc
Certificate	BY/112 02.01 TP012 103.01 00082

Shipbuilding data

Temperature	B
Humidity	B
Vibration	A
EMC	B
Enclosure	Required protection according to the Rules shall be provided upon installation on board

EMC data

Electromagnetic compatibility	Conformance with EMC directive
Noise immunity	EN 61000-6-2
Note	When being exposed to interference, there may be minimal deviations.

Noise emission

Standards/regulations	EN 61000-6-4

Electromagnetic HF field

Designation	Electromagnetic RF field
Standards/regulations	EN 61000-4-3
Typical deviation from the upper range value	1 %

Fast transients (burst)

Designation	Fast transients (burst)
Standards/regulations	EN 61000-4-4
Typical deviation from the upper range value	1 %

Conducted interference

Designation	Conducted interferences
Standards/regulations	EN 61000-4-6
Typical deviation from the upper range value	1 %

Standards and regulations

Electrical isolation	3-way isolation

Mounting

Mounting type	DIN rail mounting

Drawings

Dimensional drawing

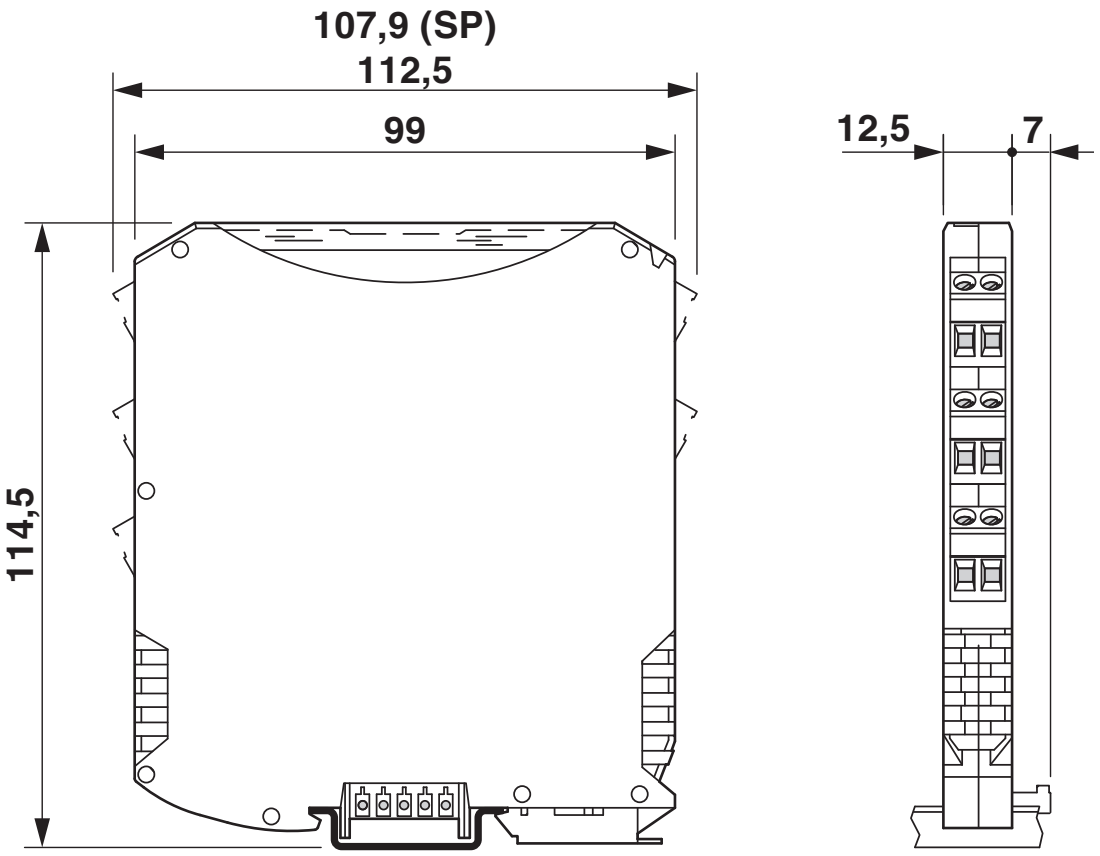

Block diagram

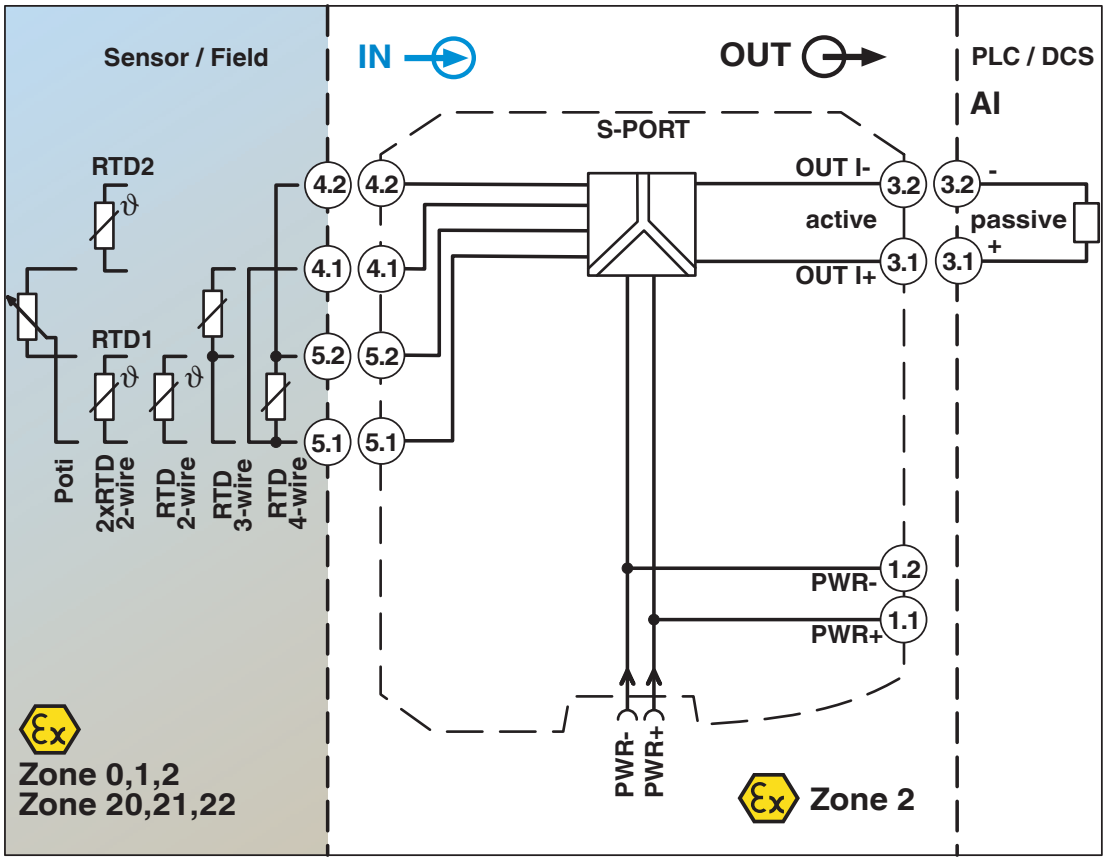

Approvals

To download certificates, visit the product detail page: https://www.phoenixcontact.com/us/products/1050222

UL Listed
Approval ID: E330267

cUL Listed
Approval ID: FILE E 330267

Functional Safety
Approval ID: SEBS-A.20170608

DNV
Approval ID: TAA00000AG

ECAS
Approval ID: 163742 E25 08 169509

cULus Listed
Approval ID: E330267

DNV
Approval ID: TAA000020C

IECEx
Approval ID: IECEx IBE 19.0001X

cUL Listed
Approval ID: FILE E 199827

UL Listed
Approval ID: E199827

ATEX
Approval ID: IBExU 19 ATEX 1006 X

INMETRO
Approval ID: DNV 21.0064 X

Classifications

ECLASS

ECLASS-13.0	27210129
ECLASS-15.0	27210129

ETIM

ETIM 10.0	EC002919

UNSPSC

UNSPSC 21.0	41112100

Environmental product compliance

EU RoHS

Fulfills EU RoHS substance requirements	Yes
Exemption	7(a), 7(a)-I, 7(c)-I

China RoHS

Environment friendly use period (EFUP)	EFUP-50
	An article-related China RoHS declaration table can be found in the download area for the respective article under "Manufacturer declaration". For all articles with EFUP-E, no China RoHS declaration table issued and required.

EU REACH SVHC

REACH candidate substance (CAS No.)	Lead(CAS: 7439-92-1)
SCIP	c047a32e-3c91-42b0-bc2b-2fa27278b863

Phoenix Contact 2026 © - all rights reserved
https://www.phoenixcontact.com

Phoenix Contact USA
586 Fulling Mill Road
Middletown, PA 17057, United States
(+717) 944-1300
info@phoenixcon.com