# FL SWITCH 2416 - Industrial Ethernet Switch

1043416

https://www.phoenixcontact.com/us/products/1043416

Please be informed that the data shown in this PDF document is generated from our online catalog. Please find the complete data in the user documentation. Our general terms of use for downloads are valid.

CRA-READY



Managed Switch 2000 series, 16 RJ45 ports 10/100 Mbps, degree of protection: IP20, Ambient temperature (operation): -40 °C ... 70 °C, Supply voltage range: 19 V DC ... 32 V DC, PROFINET Conformance Class B, Extended temperature range, Development process certified in accordance with IEC 62443-4-1, Product certified in accordance with IEC 62443-4-2, The product is being prepared for compliance with the Cyber Resilience Act (CRA)

## Your advantages

- DHCP client, DHCP server (pool-based and port-based), DHCP option 82
- Ambient temperature -40 °C ... 70 °C
- VLANs
- RSTP
- MRP (client and manager)
- Web-based management, SNMP
- Configuration memory
- Easy and fast startup and commissioning with the FL NETWORK MANAGER software
- Suitable for PROFINET and EtherNet/IP™ networks

ELEKTROGERÄTE RÜCKNAHME

## Commercial data

| | |
|---|---|
| Item number | 1043416 |
| Packing unit | 1 pc |

| | |
|---|---|
| Minimum order quantity | 1 pc |
| Sales key | DN17 |
| Product key | DNN122 |
| GTIN | 4055626611617 |
| Weight per piece (including packing) | 1,250 g |
| Weight per piece (excluding packing) | 1,035 g |
| Customs tariff number | 85176200 |
| Country of origin | DE |

## Technical data

### Dimensions

| | |
|---|---|
| Dimensional drawing | 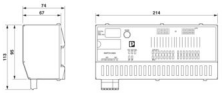 |
| Width | 214 mm |
| Height | 113 mm |
| Depth | 67 mm |

### Notes

| | |
|---|---|
| Note on application | Support by phone or on-site (fee is charged) |
| Note on application | Only for industrial use |
| Note on application | As things stand now, we are preparing the product so that, as of December 11, 2027, it will comply with the requirements of the EU Cyber Resilience Act (CRA) based on the information currently available regarding the CRA. |

### Material specifications

| | |
|---|---|
| Color (Housing) | Steel/stainless steel color |
| Material base plate | Die-cast aluminum, corrosion-resistant |
| Housing material | Stainless steel 1.4301 |

### Mounting

| | |
|---|---|
| Mounting type | DIN rail mounting |

### Interfaces

Ethernet (RJ45)

| | |
|---|---|
| Connection method | RJ45 |
| Note on the connection method | Auto negotiation and autocrossing |
| Transmission speed | 10/100 Mbps |
| Transmission physics | Copper |
| Transmission length | 100 m (per segment) |
| Signal LEDs | Data receive, link status |
| No. of channels | 16 (RJ45 ports) |

### Output data

Signal contact

| | |
|---|---|
| Output name | Relay |
| Control voltage | typ. 24 V DC |
| Actuation voltage range | max. 60 V DC |
| Current carrying capacity | max. 0.2 A |

## Product properties

| | |
|---|---|
| Product type | Switch |
| Product family | Managed Switch 2000 |
| Type | Block design |
| MTTF | 238.46 Years (SN 29500 standard, temperature 25°C, operating cycle 21%) |
| | 137.07 Years (SN 29500 standard, temperature 40°C, operating cycle 34.25%) |
| | 21.04 Years (SN 29500 standard, temperature 70°C, operating cycle 100%) |
| Special properties | Extended temperature range |
| | Development process certified in accordance with IEC 62443-4-1 |
| | Product certified in accordance with IEC 62443-4-2 |
| | The product is being prepared for compliance with the Cyber Resilience Act (CRA) |
| Signal delay | ≥ 6.5 µs (Store and Forward mode, 10/100 Mbps, depending on the frame size) |

### Insulation characteristics

| | |
|---|---|
| Protection class | III (VDE 0106) |
| Degree of pollution | 2 |

### Switch functions

| | |
|---|---|
| IP parameterization | DHCP client |
| | DHCP Option 82 (Relay Agent) |
| | DHCP server (pool-based, port-based) |
| | BootP |
| | DCP (Discovery and Configuration Protocol) |
| MAC address table | 8k |
| Signal contact control voltage | typ. 24 V DC |
| PROFINET conformance class | Conformance Class B |
| PROFINET device function | PROFINET device |
| | Fast Startup |
| Status and diagnostic indicators | LEDs: US1, US2 (power supply), Fail (alarm contact), 2 LEDs per Ethernet port (Link/Activity and Speed) |
| Basic functions | Store-and-forward switch, complies with IEEE 802.3 |
| Management functions | Web-based management (HTTP/HTTPS) |
| | Role-based user management (LDAP, RADIUS) |
| | SNMPv1/v2/v3 |
| | Command Line Interface (Telnet, SSH) |
| Diagnostic functions | RMON History |
| | LLDP (Link Layer Discovery Protocol) |
| | SNMP-Traps |
| | N:1-Portmirroring |
| | ACD (Address Conflict Detection) |
| | SysLog |

| | |
|---|---|
| | CRC-Surveillance |
| Filter functions | Quality of Service (8 priority classes) |
| | Class of Service |
| | DiffServ/DSCP |
| | Port-Priorisierung |
| | VLAN (up to 32 VLANs) |
| | IGMP Snooping/Querier (v1/v2) |
| | Auto-Query-Port |
| | Extended Multicast Filtering |
| Redundancy functions | MRP (Media Redundancy Protocol) |
| | RSTP (Rapid Spanning Tree Protocol) |
| | FRD (Fast Ring Detection) |
| | Large Tree Support |
| | LACP (Link Aggregation Control Protocol) |
| | PROFINET S2 system redundancy |
| Time synchronization | SNTP (Simple Network Time Protocol) |
| Additional functions | Transmission of MMS and GOOSE (IEC 61850-8-1) |
| | Transmission of Modbus/TCP |

Security functions

| | |
|---|---|
| Port security | MAC-based, RADIUS (IEEE 802.1X), MAC Authentication Bypass |

## Electrical properties

| | |
|---|---|
| Local diagnostics | US1/2 Supply voltage US1, US2 Green LED |
| | FAIL Div. LED red |
| | LNK/ACT Link status Green LED |
| | SPD Data transmission speed Green LED |
| Maximum power dissipation for nominal condition | 7.52 W ($U_S$ = max, $T_{amb}$ = max) |
| Test section | 24 V supply / functional ground 500 V DC 1 min |
| | Ethernet interface/all other potentials 2.25 kV DC 1 min |
| Transmission medium | Copper |

Supply

| | |
|---|---|
| Supply voltage (DC) | 24 V DC (redundant) |
| Supply voltage range | 19.2 V DC ... 32 V DC |
| Power supply connection | Via COMBICON, max. conductor cross-section 2.5 mm² |
| Residual ripple | 3.6 $V_{PP}$ (within the permitted voltage range) |
| Max. current consumption | 390 mA ($U_S$ = min, $T_{amb}$ = max) |
| Typical current consumption | 280 mA (at $U_S$ = 24 V DC and 25 °C ambient temperature) |
| Ground connection | Via DIN rail |
| Functional grounding | The functional ground of the module is grounded when it is snapped onto a grounded DIN rail |

## Connection data

| | |
|---|---|
| Connection method | Push-in spring connection |

| | |
|---|---|
| Note on the connection method | Use only copper connecting cables providing the permitted temperature range (-40 °C ... 75 °C) |
| pluggable | yes |
| Conductor cross-section, rigid | 0.2 mm² ... 1.5 mm² |
| Conductor cross-section, flexible | 0.2 mm² ... 2.5 mm² |
| Conductor cross-section AWG | 24 ... 16 |
| Stripping length | 10 mm |

## Environmental and real-life conditions

Ambient conditions

| | |
|---|---|
| Degree of protection | IP20 |
| Ambient temperature (operation) | -40 °C ... 70 °C |
| Ambient temperature (storage/transport) | -40 °C ... 85 °C |
| Permissible humidity (operation) | 10 % ... 95 % (non-condensing) |
| Permissible humidity (storage/transport) | 10 % ... 95 % (non-condensing) |
| Shock (operation) | 30g (EN 60068-2-27) |
| Vibration (operation) | in acc. with IEC 60068-2-6: 5g, 150 Hz |
| Air pressure (operation) | 79 kPa ... 108 kPa up to 2000 m above mean sea level (Without derating) |
| Air pressure (storage/transport) | 79 kPa ... 108 kPa up to 2000 m above mean sea level (Without derating) |

## Standards and regulations

| | |
|---|---|
| Free from substances that could impair the application of coating | Yes |

## Approvals

UL, USA/Canada

| | |
|---|---|
| Identification | cULus |

Corrosive gas test

| | |
|---|---|
| Identification | ISA S71.04.2013 G3 Harsh Group A |

Shipbuilding data

| | |
|---|---|
| Temperature | B |
| Humidity | B |
| Vibration | A |
| EMC | B |
| Enclosure | Required protection according to the Rules shall be provided upon installation on board |

## EMC data

| | |
|---|---|
| Electromagnetic compatibility | Conformance with EMC Directive 2014/30/EU |
| Conformance with EMC directives | EN 61000-6-2 EN 61000-4-2 (ESD) Criterion B |
| | EN 61000-6-2 EN 61000-4-3 (electromagnetic fields) Criterion A |
| | EN 61000-6-2 EN 61000-4-4 (EFT burst) Criterion A |
| | EN 61000-6-2 EN 61000-4-5 (surge) Criterion A |

| | |
|---|---|
| | EN 61000-6-2 EN 61000-4-6 (line noise immunity) Criterion A |
| | EN 61000-6-2 EN 61000-6-4 (interference) Class A |
| | EN 61000-6-2 EN 61000-6-4 (conducted interference) Class A |
| Noise immunity | EN 61000-6-2 |

Noise emission

| | |
|---|---|
| Standards/regulations | EN 61000-6-4 |

## Signaling

| | |
|---|---|
| Status display | LEDs: US1, US2 (power supply), Fail (alarm contact), 2 LEDs per Ethernet port (Link/Activity and Speed) |

## Drawings

Dimensional drawing

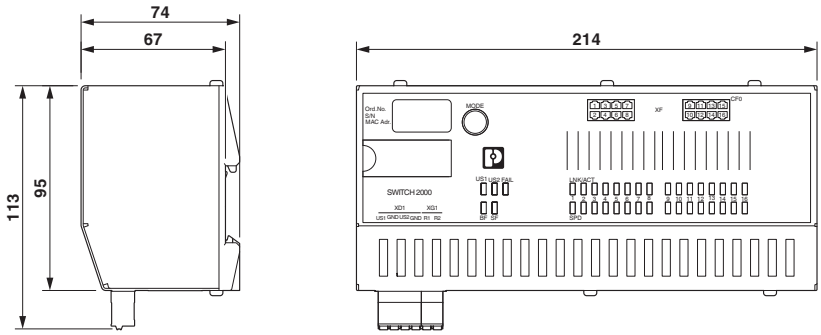


Connection diagram

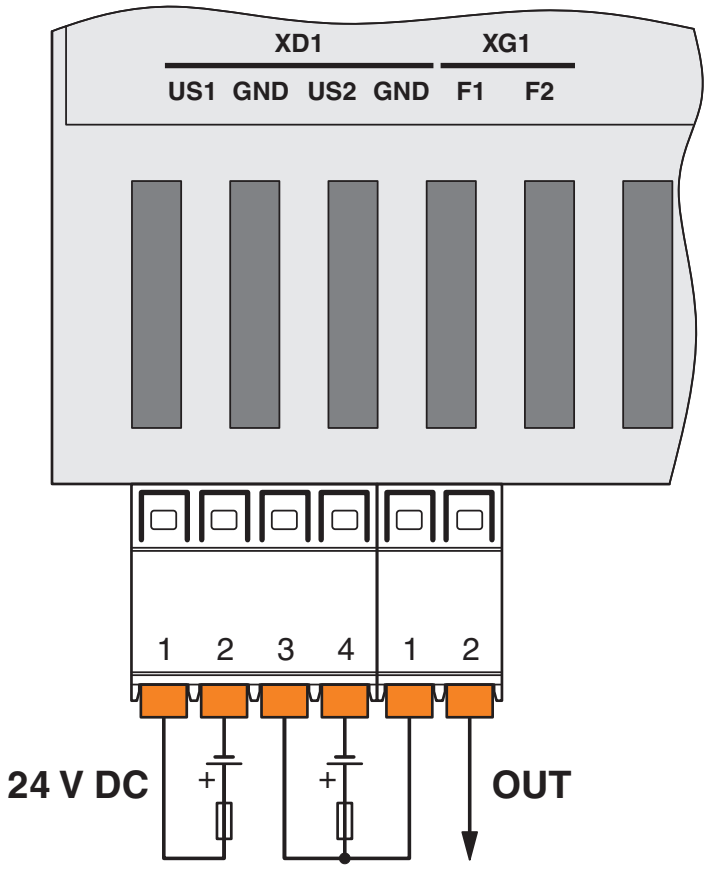

Connection diagram

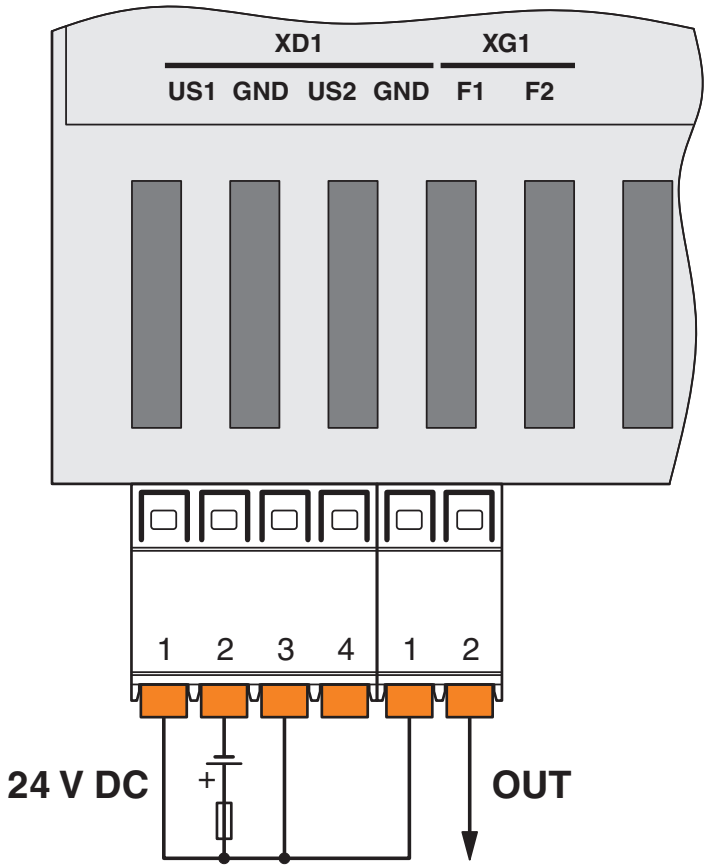

## Approvals

To download certificates, visit the product detail page: https://www.phoenixcontact.com/us/products/1043416

**DNV GL**
Approval ID: TAA00000YV

**LR**
Approval ID: LR22250919TA

**BV**
Approval ID: 48146_B1 BV

**KC**
Approval ID: R-R-PCK-1043416

**BSH**
Approval ID: 1045

**ABS**
Approval ID: 21_2066186_1_PDA

**RINA**
Approval ID: ELE014724XG001

**cULus Listed**
Approval ID: E238705

**Cybersecurity Certificate**
Approval ID: 968 CSP 1043.00 25

**BSH**
Approval ID: 1045

**BV**
Approval ID: 48146_B1 BV

**DNV GL**
Approval ID: TAA00000YV

**RINA**
Approval ID: ELE014724XG001

**LR**
Approval ID: LR22250919TA

**cULus Listed**
Approval ID: E238705

**KC**
Approval ID: R-R-PCK-1043416

**Cybersecurity Certificate**
Approval ID: 968 CSP 1043.00 25

**ABS**
Approval ID: 26-0501235-PDA

**ABS**
Approval ID: 26-0501235-PDA

## Classifications

### ECLASS

| | |
|---|---|
| ECLASS-13.0 | 19170401 |
| ECLASS-15.0 | 19170401 |

### ETIM

| | |
|---|---|
| ETIM 10.0 | EC000734 |

### UNSPSC

| | |
|---|---|
| UNSPSC 21.0 | 43222600 |

## Environmental product compliance

EU RoHS

| | |
|---|---|
| Fulfills EU RoHS substance requirements | Yes |
| Exemption | 7(a), 7(c)-I |

China RoHS

| | |
|---|---|
| Environment friendly use period (EFUP) | EFUP-50 |
| | An article-related China RoHS declaration table can be found in the download area for the respective article under "Manufacturer declaration". For all articles with EFUP-E, no China RoHS declaration table issued and required. |

EU REACH SVHC

| | |
|---|---|
| REACH candidate substance (CAS No.) | Lead(CAS: 7439-92-1) |

EF3.1 Climate Change

| | |
|---|---|
| CO2e kg | 44.152 kg CO2e |


Phoenix Contact 2026 © - all rights reserved
https://www.phoenixcontact.com



Phoenix Contact USA
586 Fulling Mill Road
Middletown, PA 17057, United States
(+717) 944-1300
info@phoenixcon.com