TC MOBILE I/O X200-4G - SMS relay

1038567

https://www.phoenixcontact.com/us/products/1038567

Please be informed that the data shown in this PDF document is generated from our online catalog. Please find the complete data in the user documentation. Our general terms of use for downloads are valid.

CRA-READY

SMS relay and signaling module, European version, monitor analog and digital values via cellular network, switch relay outputs remotely, communication via SMS or cellular data connection, supply voltage 10 V DC ... 60 V DC. Product is being prepared for compliance with the Cyber Resilience Act (CRA).

Product description

The TC MOBILE I/O X200-4G compact signaling system is the successor to the TC MOBILE I/O X200 (2903805) and PSI-MODEM-SMS-RELAY/6ADI/4DO/DC (2313520) SMS relays. The electronic signaling system monitors digital and analog values via the cellular network. The device also switches relay outputs remotely. The device offers numerous helpful software functions, such as SMS message chain, SMS in the event of a voltage drop, and different user roles. A USB connection to a computer with a web browser is all that is needed for configuration.

Your advantages

- Future-proof 4G technology (LTE CAT1), simultaneous use of well-established 2G networks (GSM, GPRS, EDGE)
- Alarm generation via SMS in the field
- Message chain for sending an alert to the relevant service technician
- Alarm generation on voltage failure via SMS
- Free switching via phone call
- Cost control for prepaid cards
- Remote commands to avoid on-site servicing: switching, configuration commands, and logbook transmission
- Compact design also for domestic installations (4 HP, DIN 43880)
- Mounting on DIN rail or on the wall

Commercial data

Item number	1038567
Packing unit	1 pc
Minimum order quantity	1 pc
Sales key	NULL
Product key	DNC423
GTIN	4055626592046
Weight per piece (including packing)	241 g
Weight per piece (excluding packing)	178.5 g
Customs tariff number	85176200
Country of origin	DE

Technical data

Notes

Note on application	Only for industrial use
Note on application	As things stand now, we are preparing the product so that, as of December 11, 2027, it will comply with the requirements of the EU Cyber Resilience Act (CRA) based on the information currently available regarding the CRA.

Product properties

Product type	Signaling system
Application	I/O
MTTF	674 Years (SN 29500 standard, temperature 25°C, operating cycle 21%)
	324 Years (SN 29500 standard, temperature 40°C, operating cycle 34.25%)
	130 Years (SN 29500 standard, temperature 40°C, operating cycle 100%)
Special properties	The product is being prepared for compliance with the Cyber Resilience Act (CRA)

Electrical properties

Maximum power dissipation for nominal condition	1.2 W
Mains type	Cellular communication

Supply

Supply voltage range	10 V DC ... 60 V DC
Typical current consumption	50 mA (24 V DC)
Max. current consumption	80 mA

Input data

Digital

Description of the input	Digital input
Number of inputs	4
Switching threshold "0" signal in reference to U_N	≤ 0.3
Switching threshold "1" signal in reference to U_N	≥ 0.7

Analog

Description of the input	Analog input
Number of inputs	2
Input signal	Current or voltage
Resolution	15 bit
Input impedance	600 kΩ (Voltage inputs)
	50 Ω (Current inputs)
Voltage input signal	0 V DC ... 60 V DC
Current input signal	0 mA ... 20 mA

	4 mA ... 20 mA (configurable)
Precision	± 0.1 %

Output data

Switching

Output name	Relay output
Number of outputs	4
Contact switching type	N/O contact
Minimum switching voltage	100 mV
Maximum switching voltage	60 V DC
	30 V AC
Limiting continuous current	6 A
Switching power	100 W (Power Source PS2, P_{out} ≤100 W)
Electrical service life	30000 cycles

Connection data

Supply

Connection method	Screw connection
Conductor cross-section, flexible, with ferrule, without plastic sleeve	0.25 mm² ... 2.5 mm²
Conductor cross-section, flexible, with ferrule, with plastic sleeve	0.25 mm² ... 2.5 mm²
Single conductor/terminal point, rigid	0.2 mm² ... 2.5 mm²
Single-wire/terminal point, flexible	0.2 mm² ... 2.5 mm²
Conductor cross-section, flexible [AWG]	24 ... 14
Stripping length	6.50 mm
Tightening torque	0.5 Nm ... 0.6 Nm (5-7 lbs-in, screw terminal blocks)

Interfaces

Data: USB 2.0

Connection method	Mini-USB type B, 5-pos.
Transmission length	≤ 3 m (only for configuration and diagnostics)

Wireless

Interface description	GSM / GPRS / EDGE / LTE (FDD)
Frequency range	800 MHz (LTE B20)
	1800 MHz (LTE B3)
	2600 MHz (LTE B7)
	900 MHz (2 W (EGSM))
	1800 MHz (1 W (EGSM))
Number	1
Connection method	SMA (female)
GPRS	Multislot Class 33
EDGE	Multislot Class 33
LTE	CAT1

Dimensions

Width	72 mm
Height	90 mm
Depth	62 mm

Material specifications

Color (Upper housing part)	light gray (RAL 7035)
Color (Lower housing part)	black (RAL 9005)
Material (Housing)	Polycarbonate

Environmental and real-life conditions

Ambient conditions

Degree of protection	IP20
Ambient temperature (operation)	-25 °C ... 70 °C (SMS mode only, note the derating information in the technical documentation for data connection)
Ambient temperature (storage/transport)	-40 °C ... 85 °C
Altitude	2000 m
Permissible humidity (operation)	0 % ... 95 %

Approvals

CE

Certificate	CE-compliant

Wireless approval, Europe

Note	RED 2014/53/EU

EMC data

Electromagnetic compatibility	Conformance with EMC Directive 2014/30/EU and RED Directive 2014/53/EU, Delegated Act 2022/30

Electrostatic discharge

Standards/regulations	EN 61000-4-2

Electrostatic discharge

Contact discharge	± 6 kV
Discharge in air	± 8 kV
Indirect discharge	± 6 kV
Comments	Criterion B

Electromagnetic HF field

Standards/regulations	EN 61000-4-3

Electromagnetic HF field

Frequency range	26 MHz ... 6 GHz
Field intensity	10 V/m
Comments	Criterion A

Fast transients (burst)

Standards/regulations	EN 61000-4-4

Fast transients (burst)

Input	± 2 kV (Unshielded supply line)
Signal	± 2 kV (Shielded signal line)
	± 2 kV (Analog I/O cables, unshielded)
Comments	Criterion B

Surge current load (surge)

Standards/regulations	EN 61000-4-5

Surge current load (surge)

Input	± 0.5 kV (Symmetrical, unshielded supply line)
	± 0.5 kV (Asymmetrical, unshielded supply line)
Signal	± 1 kV (Data line, asymmetrical)
Comments	Criterion B

Conducted interference

Standards/regulations	EN 61000-4-6

Conducted interference

Frequency range	0.15 MHz ... 80 MHz
Comments	Criterion A
Voltage	10 V

Emitted interference

Emitted radio interference in acc. with EN 55011	Class B, area of application: Industry and residential

Criteria

Criterion A	Normal operating behavior within the specified limits.
Criterion B	Temporary impairment to operational behavior that is corrected by the device itself.

Standards and regulations

Standards/regulations	EN 50360
Standard designation	EMF exposure limits for devices held or worn near the ear
Standards/regulations	EN 50121-4
Standard designation	Railway applications

Mounting

Mounting type	DIN rail mounting
	Panel mounting

Drawings

Connection diagram

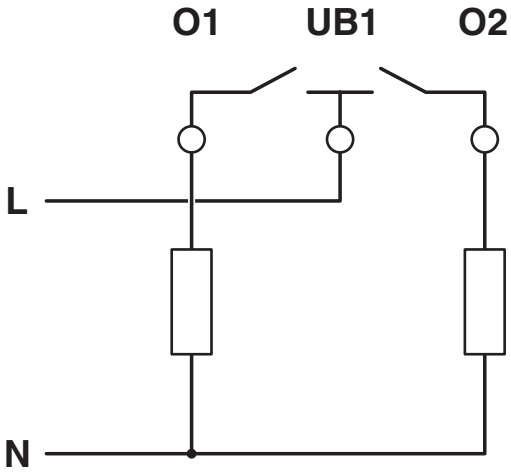

Floating relay contacts

Schematic diagram

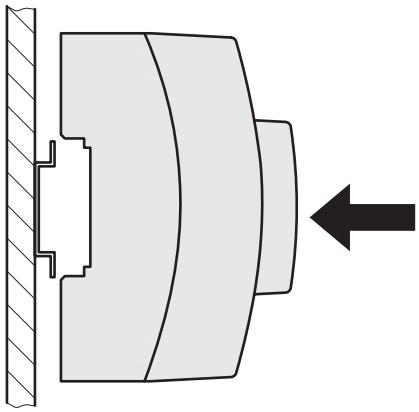

DIN rail mounting

Schematic diagram

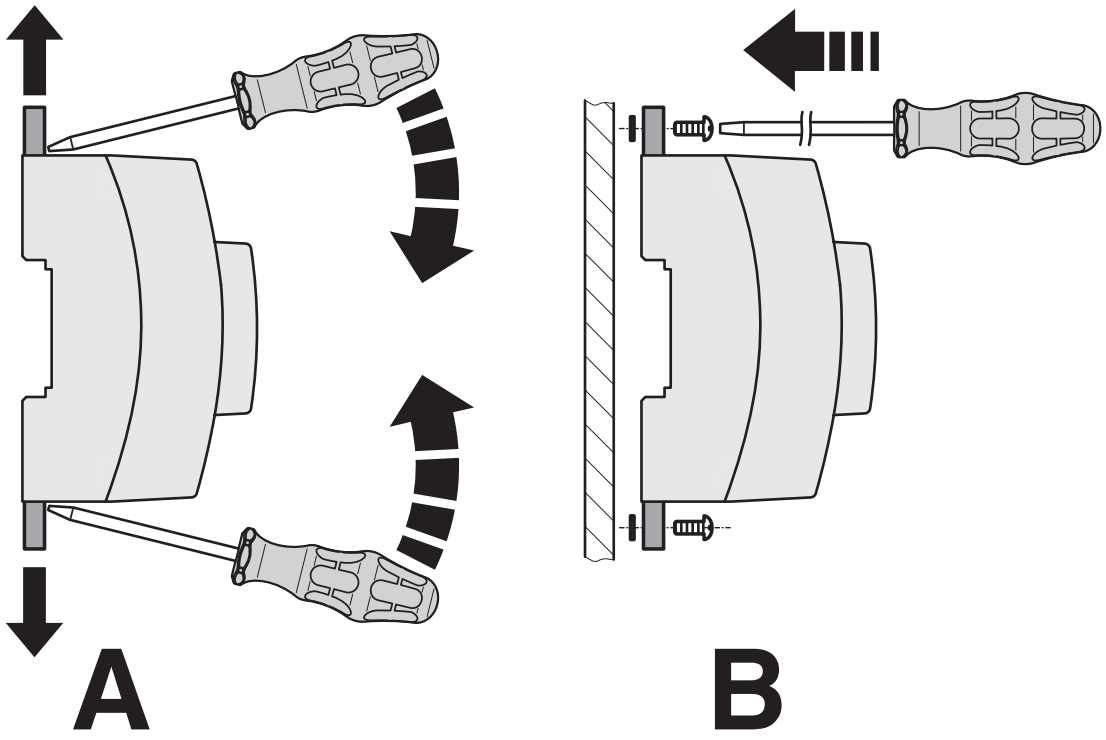

Panel mounting

Schematic diagram

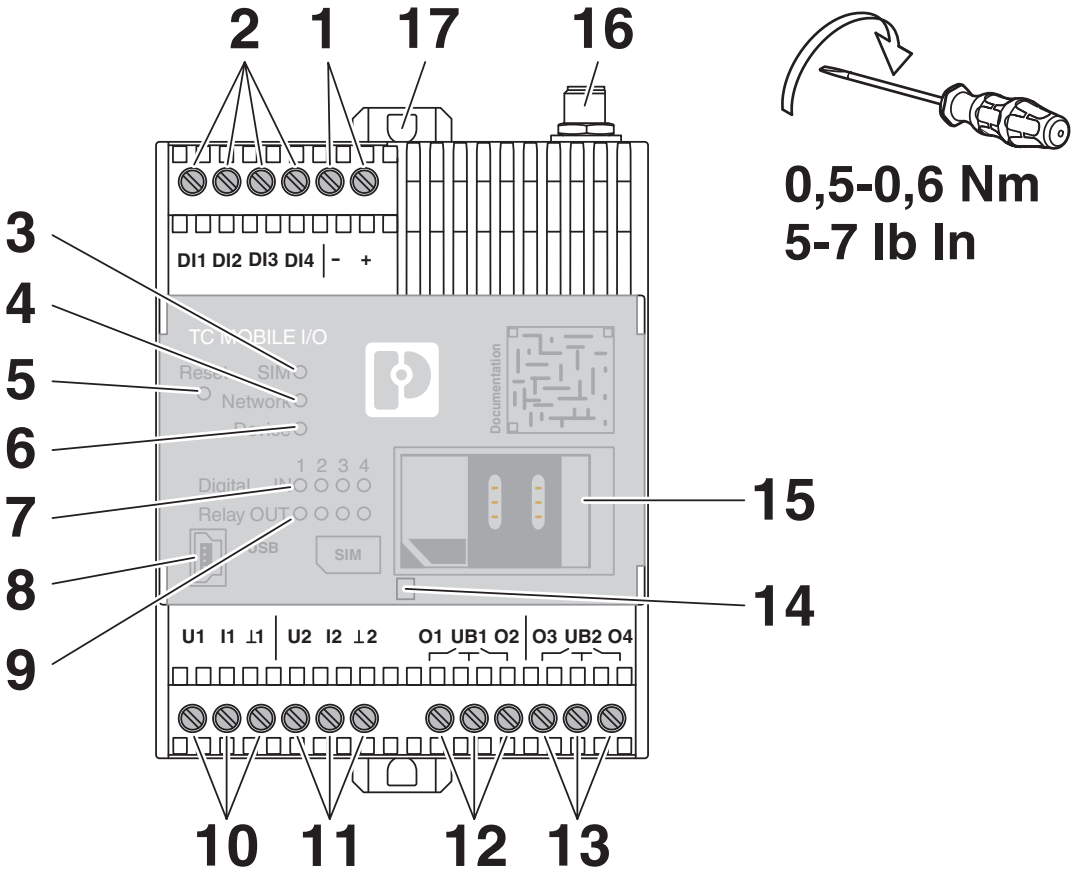

Front view

Schematic diagram

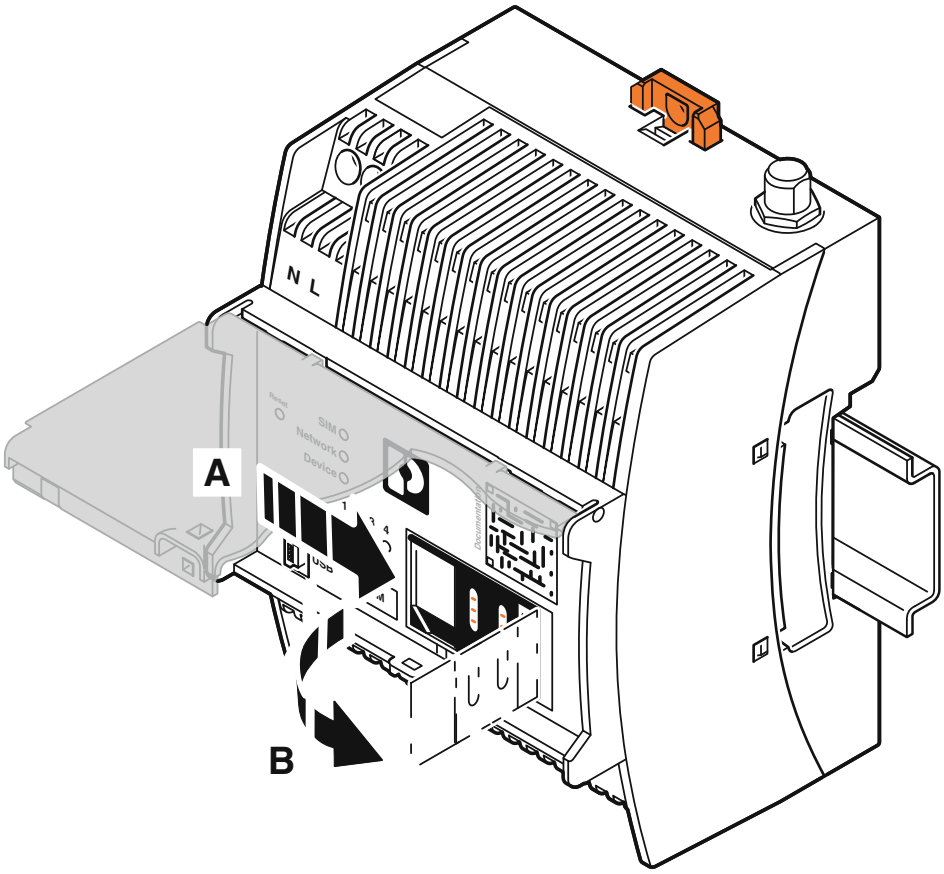

Insert the SIM card

Schematic diagram

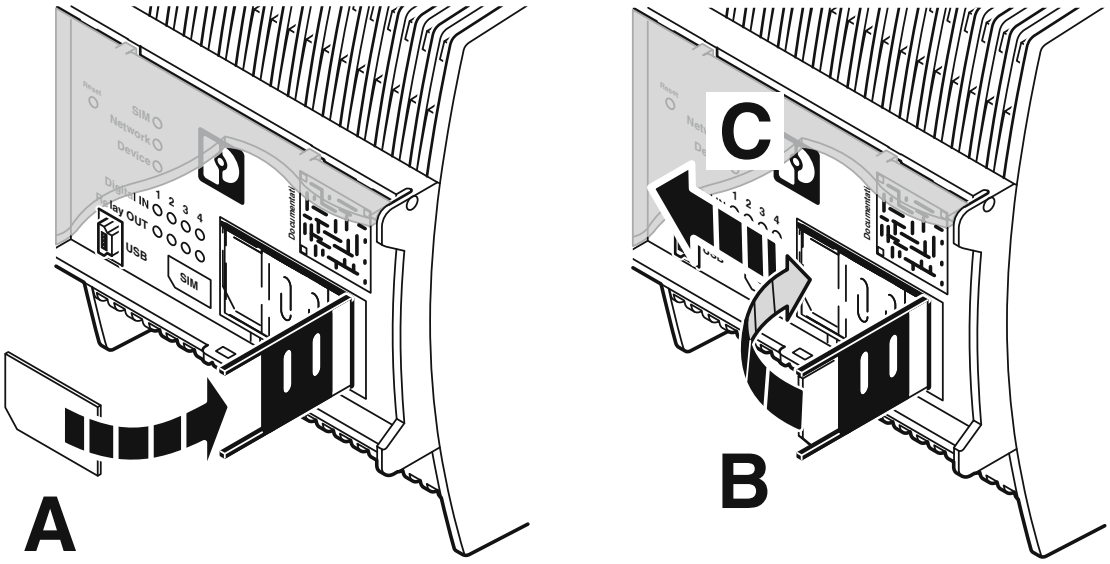

Insert the SIM card

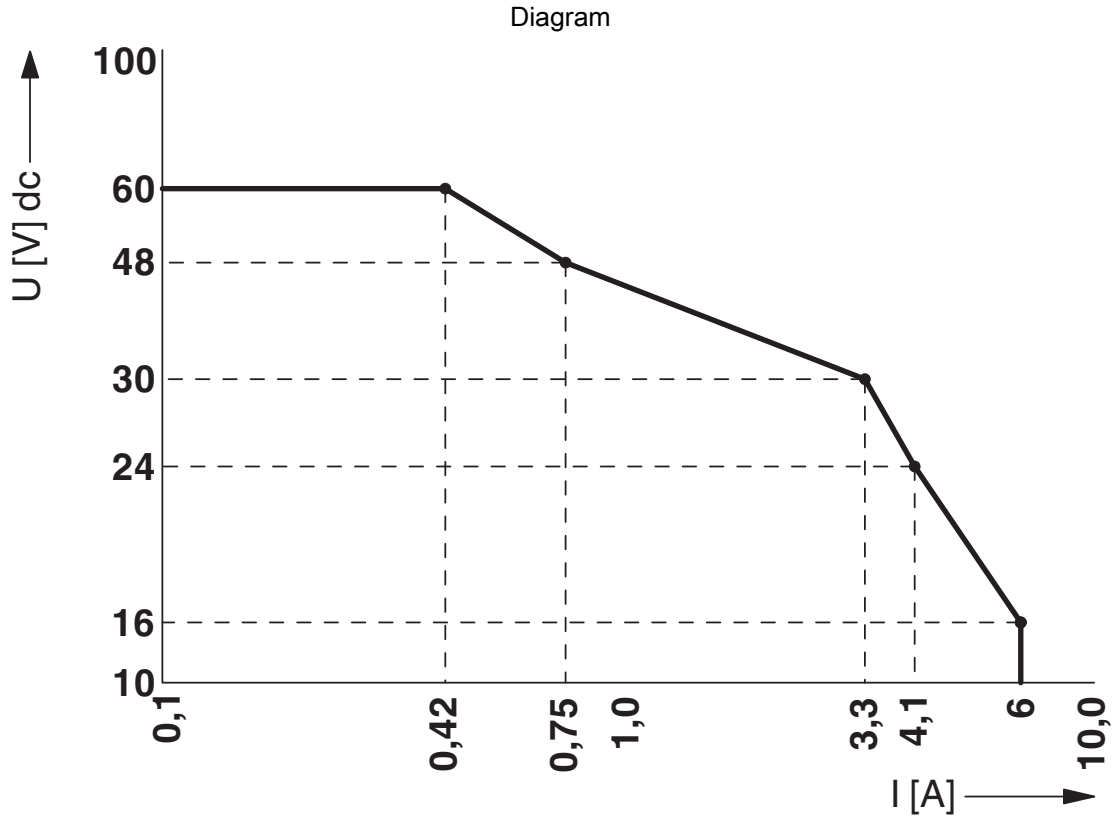

Relay load curve DC

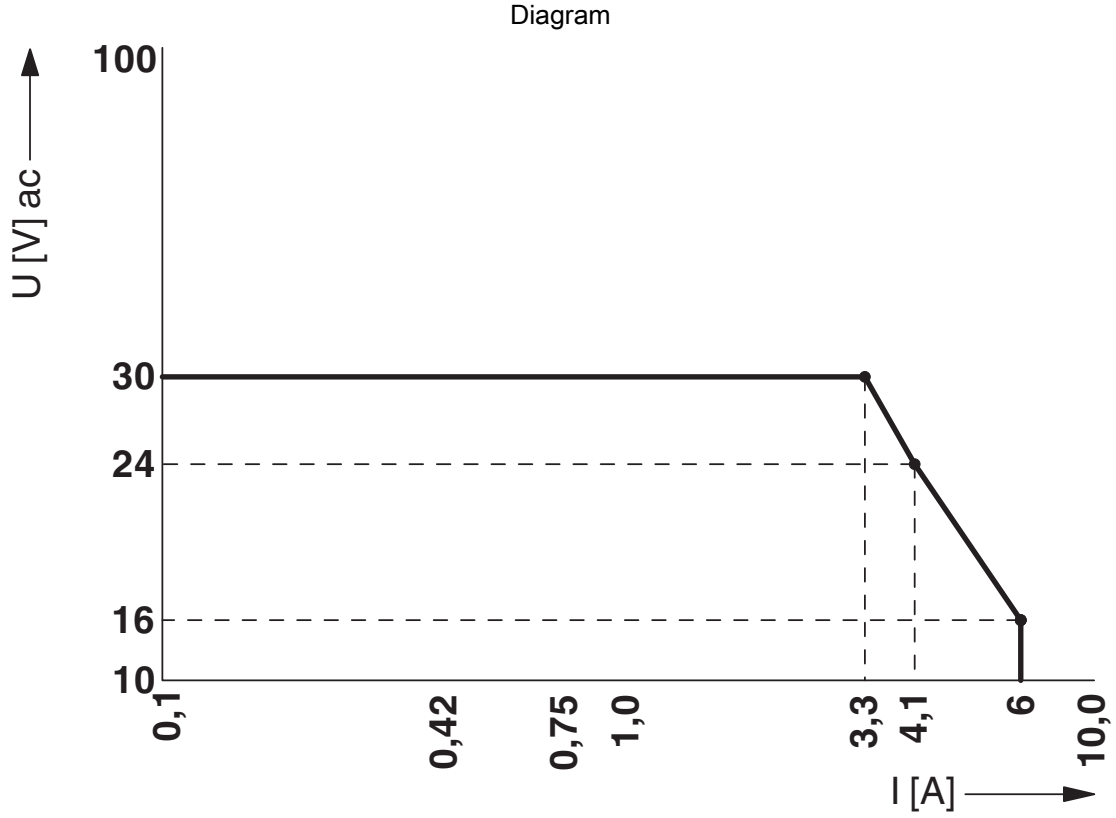

Relay load curve AC

Classifications

ECLASS

ECLASS-13.0	19170505
ECLASS-15.0	19170505

ETIM

ETIM 10.0	EC001467

UNSPSC

UNSPSC 21.0	39122200

Environmental product compliance

EU RoHS

Fulfills EU RoHS substance requirements	Yes
Exemption	6(c), 7(a), 7(c)-I

China RoHS

Environment friendly use period (EFUP)	EFUP-50
	An article-related China RoHS declaration table can be found in the download area for the respective article under "Manufacturer declaration". For all articles with EFUP-E, no China RoHS declaration table issued and required.

EU REACH SVHC

REACH candidate substance (CAS No.)	Lead(CAS: 7439-92-1)
SCIP	5d3ff2e2-53b6-4547-97b8-48eb91e8b79a

EF3.1 Climate Change

CO2e kg	11.271 kg CO2e

Phoenix Contact 2026 © - all rights reserved
https://www.phoenixcontact.com

Phoenix Contact USA
586 Fulling Mill Road
Middletown, PA 17057, United States
(+717) 944-1300
info@phoenixcon.com