HC-COM-HHFS-1SGM25-PL-BK - Housing

1012581

https://www.phoenixcontact.com/us/products/1012581

Please be informed that the data shown in this PDF document is generated from our online catalog. Please find the complete data in the user documentation. Our general terms of use for downloads are valid.



Sleeve housing COM, for single locking latch, material: PA, cable outlets: 1, lateral, 1x M25, height: 84 mm, cable gland: with, Standard

Your advantages

- Lower costs than metal version
- Low weight
- Lower risk of condensation

Commercial data

Item number	1012581
Packing unit	1 pc
Minimum order quantity	1 pc
Sales key	BF59
Product key	AF7APO
GTIN	4055626490403
Weight per piece (including packing)	50.6 g
Weight per piece (excluding packing)	48.8 g
Customs tariff number	85389099
Country of origin	CN

Technical data

Product properties

Product type	Housing with locking latch
Housing type	Sleeve housing
Product family	HC-COM
Application	Standard
Type	COM
No. of cable outlets	1
Type of the screw connection	1x M25
Cable outlet	lateral
Pg screw connection	with

Dimensions

Dimensional drawing	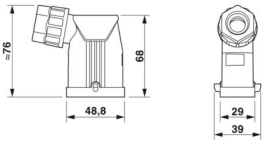
Width	39 mm
Height	84 mm
Length	48.8 mm

Material specifications

Flammability rating according to UL 94	V0 (Housing)
Housing material	PA

Mechanical properties

Mechanical data

Type of the screw connection	1x M25
Locking type	Pin

Cable/line

External cable diameter	10 mm ... 16 mm

Connection data

External cable diameter	10 mm ... 16 mm

Environmental and real-life conditions

Ambient conditions

Degree of protection	IP66
Impact strength	IK06
Ambient temperature (operation)	-40 °C ... 125 °C

Drawings

Dimensional drawing

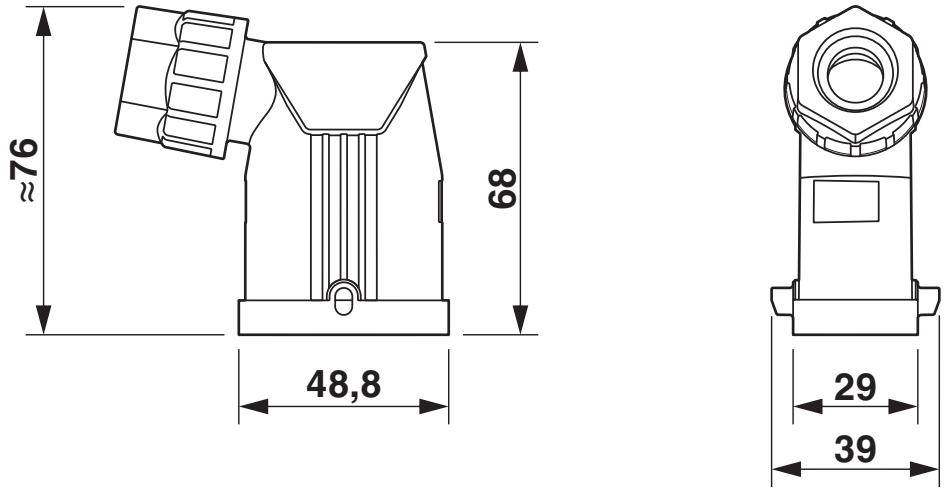

Approvals

To download certificates, visit the product detail page: https://www.phoenixcontact.com/us/products/1012581

cUL Recognized
Approval ID: E255026

UL Recognized
Approval ID: E255026

cULus Recognized
Approval ID: E468743

Classifications

ECLASS

ECLASS-13.0	27440202
ECLASS-15.0	27440202

ETIM

ETIM 10.0	EC000437

UNSPSC

UNSPSC 21.0	31261500

Environmental product compliance

EU RoHS

Fulfills EU RoHS substance requirements	Yes, No exemptions

China RoHS

Environment friendly use period (EFUP)	EFUP-E
	No hazardous substances above the limits

EU REACH SVHC

REACH candidate substance (CAS No.)	No substance above 0.1 wt%

Phoenix Contact 2026 © - all rights reserved
https://www.phoenixcontact.com

Phoenix Contact USA
586 Fulling Mill Road
Middletown, PA 17057, United States
(+717) 944-1300
info@phoenixcon.com