UT 6-TMC M 15A - Thermal-magnetic device circuit breaker

0916612

https://www.phoenixcontact.com/us/products/0916612

Please be informed that the data shown in this PDF document is generated from our online catalog. Please find the complete data in the user documentation. Our general terms of use for downloads are valid.



Thermal-magnetic circuit breaker, 1-pos., for DIN rail mounting

Your advantages

- Simple feed-in due to bridging capability
  using CLIPLINE complete accessories
- High system availability, thanks to easy resetting
- Quick and easy identification with large-area marking options
- The right device for every application, thanks to a nominal current range of 0.5 to 16 A
- Space savings of 30 % compared to miniature circuit breakers owing to the compact width of 12.3 mm

ELEKTROGERÄTE RÜCKNAHME

Commercial data

Item number	0916612
Packing unit	6 pc
Minimum order quantity	6 pc
Sales key	CL16
Product key	CLA122
GTIN	4046356449489
Weight per piece (including packing)	64.42 g
Weight per piece (excluding packing)	64.42 g
Customs tariff number	85362010
Country of origin	CZ

Technical data

Product properties

Product type	Thermomagnetic device circuit breakers
Product family	UT 6-TMC
Type	DIN rail module, one-piece
Number of positions	1
Number of connections	2
Number of rows	1
No. of channels	1
Potentials	1

Insulation characteristics

Overvoltage category	II
Degree of pollution	2

Electrical properties

Fuse type	Automatic device
Maximum power dissipation for nominal condition	≤ 1.87 VA

General

Operating voltage	50 V AC ... 264 V AC (48 - 62 Hz)
	5 V DC ... 30.8 V DC
Rated voltage	240 V AC (50/60 Hz)
	28 V DC
	240 V AC (50/60 Hz)
	28 V DC
Rated insulation voltage U_i	440 V AC
Rated current I_N	15 A
Rated surge voltage	2.8 kV
Insulation resistance R_{iso}	> 100 MΩ (main contact)
Type of actuation	S type
Tripping method	TM (thermal-magnetic)
Tripping level	Trip-free mechanism (positive)
Device resistance	8.3 mΩ
Required backup fuse	25 A
Rated short-circuit switching capacity I_{cn}	200 A (240 V AC)
	400 A (28 V DC)
Dielectric strength	2000 V
Switching cycles, max.	6000 (at 1 x I_n)
	50 (at 1.5 x I_n)
	40 (at 6 x I_n)
Fuse	M1 (normal blow)
Power dissipation	≤ 1.87 VA

Contact switching type	none

Indicator/remote signaling

Connection name	Auxiliary contact

Connection data

Nominal cross section	6.00 mm²
Rated cross section AWG	8
Connection method	Screw connection

Level 1 above 1 below 1

Connection method	Screw connection
Screw thread	M4
Tightening torque	1.5 ... 1.8 Nm
Stripping length	12 mm
Conductor cross-section rigid	0.2 mm² ... 10 mm²
Cross section AWG	24 ... 8 (converted acc. to IEC)
Conductor cross-section flexible	0.2 mm² ... 10 mm²
Conductor cross-section, flexible [AWG]	24 ... 8 (converted acc. to IEC)
Conductor cross-section flexible (ferrule without plastic sleeve)	0.25 mm² ... 6 mm²
Flexible conductor cross-section (ferrule with plastic sleeve)	0.25 mm² ... 6 mm²
2 conductors with same cross section, rigid	0.2 mm² ... 2.5 mm²
2 conductors with same cross section, flexible	0.2 mm² ... 2.5 mm²
2 conductors with same cross section, flexible, with ferrule without plastic sleeve	0.25 mm² ... 1.5 mm²
2 conductors with the same cross section, flexible, with TWIN ferrule with plastic sleeve	0.5 mm² ... 4 mm²
Nominal cross section	6 mm²
Nominal current	15 A
Nominal voltage	240 V AC
	28 V DC

Main contact

Connection method	Screw connection
Screw thread	M4
Tightening torque	1.5 Nm ... 1.8 Nm
Stripping length	12 mm
Conductor cross-section flexible	0.2 mm² ... 10 mm²
Conductor cross-section rigid	0.2 mm² ... 10 mm²
Conductor cross-section AWG	24 ... 8
2 conductors with the same cross section, flexible, with TWIN ferrule with plastic sleeve	0.5 mm² ... 4 mm²
Conductor cross-section, flexible, with ferrule, with plastic sleeve	0.25 mm² ... 6 mm²
Conductor cross-section, flexible, with ferrule, without plastic sleeve	0.25 mm² ... 6 mm²

Dimensions

Width	12.3 mm
Height	85.5 mm
Depth	89.5 mm

Material specifications

Color	gray (RAL 7042)
Flammability rating according to UL 94	V-0
Insulating material	PA66

Mechanical properties

Mechanical data

Open side panel	No

Environmental and real-life conditions

Ambient conditions

Degree of protection	IP40 (Actuation area)
	IP20 (Connection area)
Ambient temperature (operation)	-30 °C ... 60 °C
Altitude	2000 m (acc. to EN 60934)

Standards and regulations

Standards/specifications	EN 60934
Standards/specifications	UL 1077
Standards/specifications	CSA 22.2
Note	No. 235

Mounting

Mounting type	DIN rail: 35 mm

UT 6-TMC M 15A - Thermal-magnetic device circuit breaker

0916612

https://www.phoenixcontact.com/us/products/0916612

Drawings

Application drawing

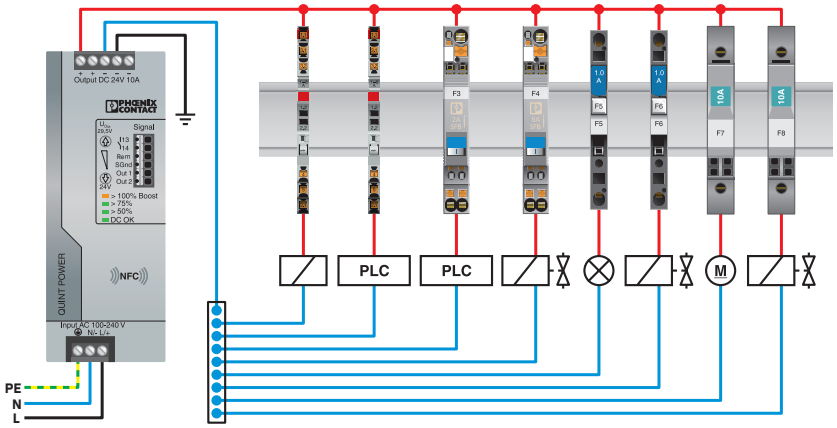

Application drawing

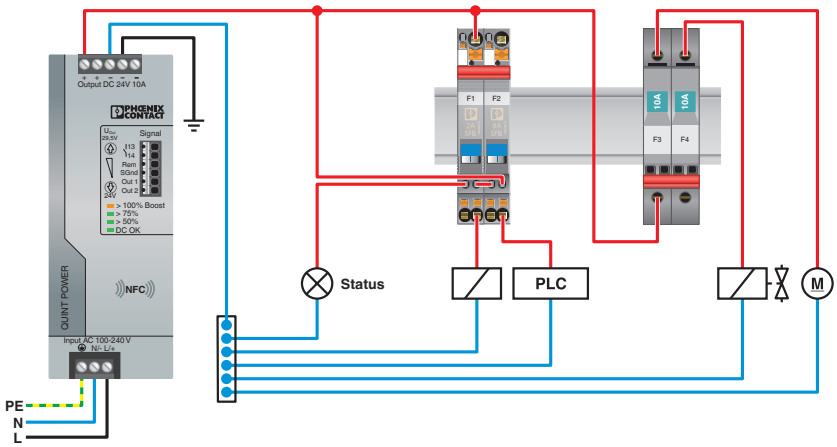

Diagram

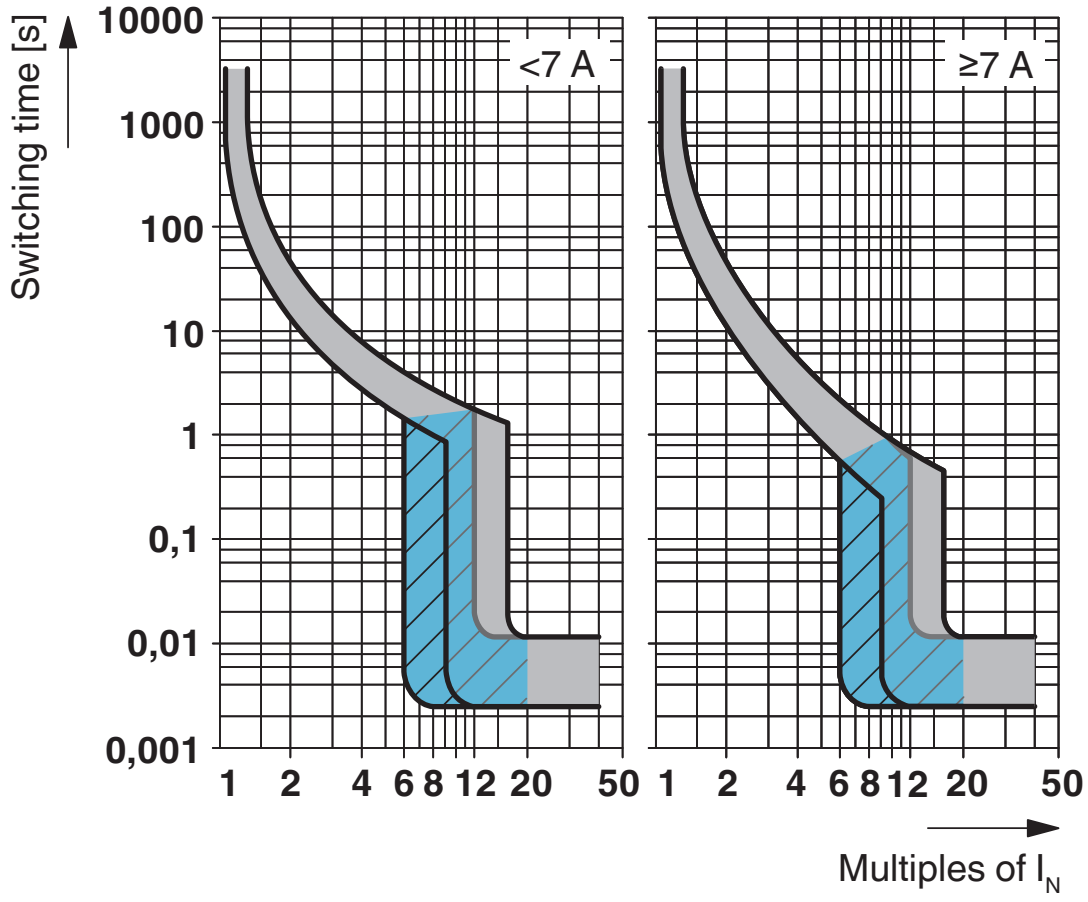

Trigger characteristic

Diagram

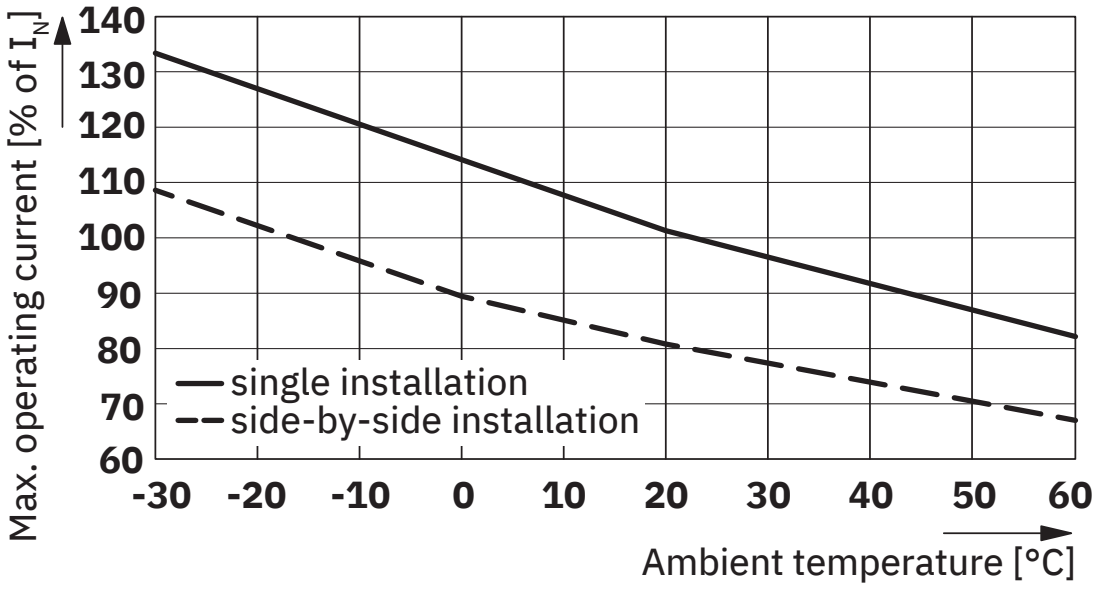

Operating current correction factor

Block diagram

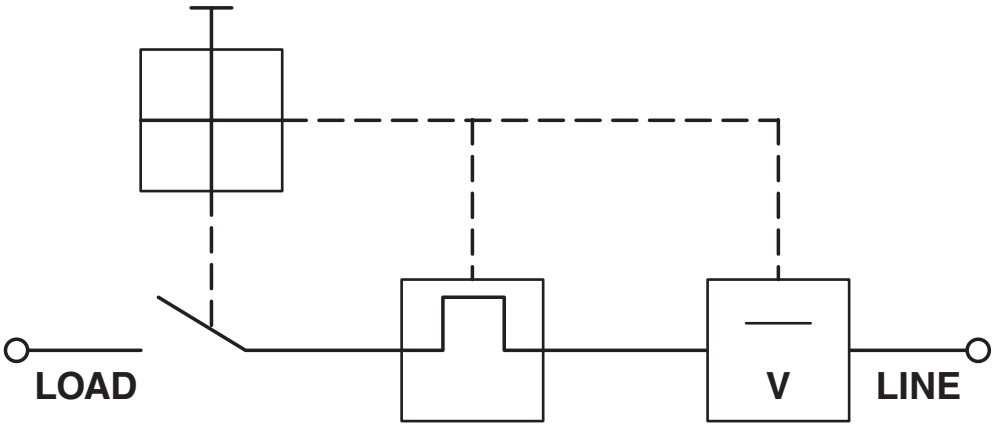

Approvals

To download certificates, visit the product detail page: https://www.phoenixcontact.com/us/products/0916612

cUL Recognized
Approval ID: FILE E 140459

UL Recognized
Approval ID: FILE E 140459

VDE Zeichengenehmigung
Approval ID: 40028127

CSA
Approval ID: 250505

Classifications

ECLASS

ECLASS-13.0	27140401
ECLASS-15.0	27140401

ETIM

ETIM 10.0	EC003538

UNSPSC

UNSPSC 21.0	39121400

Environmental product compliance

EU RoHS

Fulfills EU RoHS substance requirements	Yes, No exemptions

China RoHS

Environment friendly use period (EFUP)	EFUP-E
	No hazardous substances above the limits

EU REACH SVHC

REACH candidate substance (CAS No.)	No substance above 0.1 wt%

EF3.1 Climate Change

CO2e kg	1.033 kg CO2e

Phoenix Contact 2026 © - all rights reserved
https://www.phoenixcontact.com

Phoenix Contact USA
586 Fulling Mill Road
Middletown, PA 17057, United States
(+717) 944-1300
info@phoenixcon.com