# UT 6-TMC M 2A - Thermal-magnetic device circuit breaker

0916605

https://www.phoenixcontact.com/us/products/0916605

Please be informed that the data shown in this PDF document is generated from our online catalog. Please find the complete data in the user documentation. Our general terms of use for downloads are valid.



Thermal-magnetic circuit breaker, 1-pos., for DIN rail mounting

## Your advantages

- Simple feed-in due to bridging capability
  using CLIPLINE complete accessories
- High system availability, thanks to easy resetting
- Quick and easy identification with large-area marking options
- The right device for every application, thanks to a nominal current range of 0.5 to 16 A
- Space savings of 30 % compared to miniature circuit breakers owing to the compact width of 12.3 mm

ELEKTROGERÄTE RÜCKNAHME

## Commercial data

| | |
|---|---|
| Item number | 0916605 |
| Packing unit | 6 pc |
| Minimum order quantity | 6 pc |
| Sales key | CL16 |
| Product key | CLA122 |
| GTIN | 4046356449014 |
| Weight per piece (including packing) | 63.475 g |
| Weight per piece (excluding packing) | 63 g |
| Customs tariff number | 85362010 |
| Country of origin | CZ |

## Technical data

### Product properties

| | |
|---|---|
| Product type | Thermomagnetic device circuit breakers |
| Product family | UT 6-TMC |
| Type | DIN rail module, one-piece |
| Number of positions | 1 |
| Number of connections | 2 |
| Number of rows | 1 |
| No. of channels | 1 |
| Potentials | 1 |

Insulation characteristics

| | |
|---|---|
| Overvoltage category | II |
| Degree of pollution | 2 |

### Electrical properties

| | |
|---|---|
| Fuse type | Automatic device |
| Maximum power dissipation for nominal condition | ≤ 1.32 VA |

General

| | |
|---|---|
| Operating voltage | 50 V AC ... 264 V AC (48 - 62 Hz) |
| | 5 V DC ... 30.8 V DC |
| Rated voltage | 240 V AC (50/60 Hz) |
| | 28 V DC |
| | 240 V AC (50/60 Hz) |
| | 28 V DC |
| Rated insulation voltage $U_i$ | 440 V AC |
| Rated current $I_N$ | 2 A |
| Rated surge voltage | 2.8 kV |
| Insulation resistance $R_{iso}$ | > 100 MΩ (main contact) |
| Type of actuation | S type |
| Tripping method | TM (thermal-magnetic) |
| Tripping level | Trip-free mechanism (positive) |
| Device resistance | 330 mΩ |
| Required backup fuse | 16 A |
| Rated short-circuit switching capacity $I_{cn}$ | 200 A (240 V AC) |
| | 400 A (28 V DC) |
| Dielectric strength | 2000 V |
| Switching cycles, max. | 6000 (at 1 x $I_n$) |
| | 50 (at 1.5 x $I_n$) |
| | 40 (at 6 x $I_n$) |
| Fuse | M1 (normal blow) |
| Power dissipation | ≤ 1.32 VA |

| | |
|---|---|
| Contact switching type | none |

Indicator/remote signaling

| | |
|---|---|
| Connection name | Auxiliary contact |

## Connection data

| | |
|---|---|
| Nominal cross section | 6.00 mm² |
| Rated cross section AWG | 8 |
| Connection method | Screw connection |

Level 1 above 1 below 1

| | |
|---|---|
| Connection method | Screw connection |
| Screw thread | M4 |
| Tightening torque | 1.5 ... 1.8 Nm |
| Stripping length | 12 mm |
| Conductor cross-section rigid | 0.2 mm² ... 10 mm² |
| Cross section AWG | 24 ... 8 (converted acc. to IEC) |
| Conductor cross-section flexible | 0.2 mm² ... 10 mm² |
| Conductor cross-section, flexible [AWG] | 24 ... 8 (converted acc. to IEC) |
| Conductor cross-section flexible (ferrule without plastic sleeve) | 0.25 mm² ... 6 mm² |
| Flexible conductor cross-section (ferrule with plastic sleeve) | 0.25 mm² ... 6 mm² |
| 2 conductors with same cross section, rigid | 0.2 mm² ... 2.5 mm² |
| 2 conductors with same cross section, flexible | 0.2 mm² ... 2.5 mm² |
| 2 conductors with same cross section, flexible, with ferrule without plastic sleeve | 0.25 mm² ... 1.5 mm² |
| 2 conductors with the same cross section, flexible, with TWIN ferrule with plastic sleeve | 0.5 mm² ... 4 mm² |
| Nominal cross section | 6 mm² |
| Nominal current | 2 A |
| Nominal voltage | 240 V AC |
| | 28 V DC |

Main contact

| | |
|---|---|
| Connection method | Screw connection |
| Screw thread | M4 |
| Tightening torque | 1.5 Nm ... 1.8 Nm |
| Stripping length | 12 mm |
| Conductor cross-section flexible | 0.2 mm² ... 10 mm² |
| Conductor cross-section rigid | 0.2 mm² ... 10 mm² |
| Conductor cross-section AWG | 24 ... 8 |
| 2 conductors with the same cross section, flexible, with TWIN ferrule with plastic sleeve | 0.5 mm² ... 4 mm² |
| Conductor cross-section, flexible, with ferrule, with plastic sleeve | 0.25 mm² ... 6 mm² |
| Conductor cross-section, flexible, with ferrule, without plastic sleeve | 0.25 mm² ... 6 mm² |

## Dimensions

| | |
|---|---|
| Width | 12.3 mm |
| Height | 85.5 mm |
| Depth | 89.5 mm |

## Material specifications

| | |
|---|---|
| Color | gray (RAL 7042) |
| Flammability rating according to UL 94 | V-0 |
| Insulating material | PA66 |

## Mechanical properties

Mechanical data

| | |
|---|---|
| Open side panel | No |

## Environmental and real-life conditions

Ambient conditions

| | |
|---|---|
| Degree of protection | IP40 (Actuation area) |
| | IP20 (Connection area) |
| Ambient temperature (operation) | -30 °C ... 60 °C |
| Altitude | 2000 m (acc. to EN 60934) |

## Standards and regulations

| | |
|---|---|
| Standards/specifications | EN 60934 |
| Standards/specifications | UL 1077 |
| Standards/specifications | CSA 22.2 |
| Note | No. 235 |

## Mounting

| | |
|---|---|
| Mounting type | DIN rail: 35 mm |

# UT 6-TMC M 2A - Thermal-magnetic device circuit breaker

0916605

https://www.phoenixcontact.com/us/products/0916605

## Drawings

Application drawing

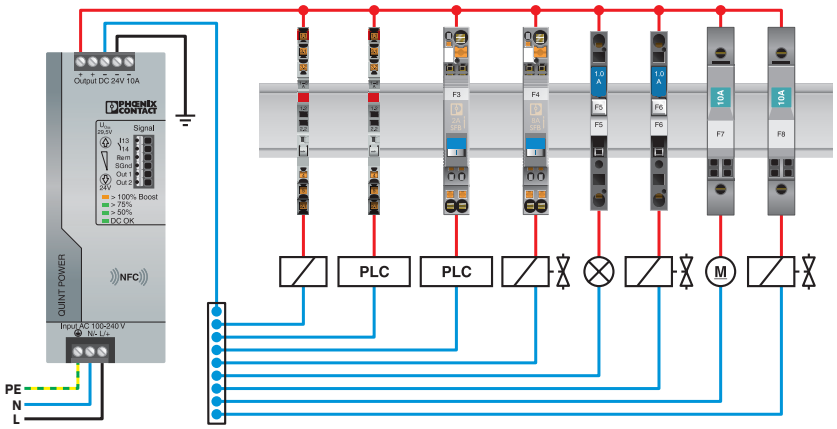


Application drawing

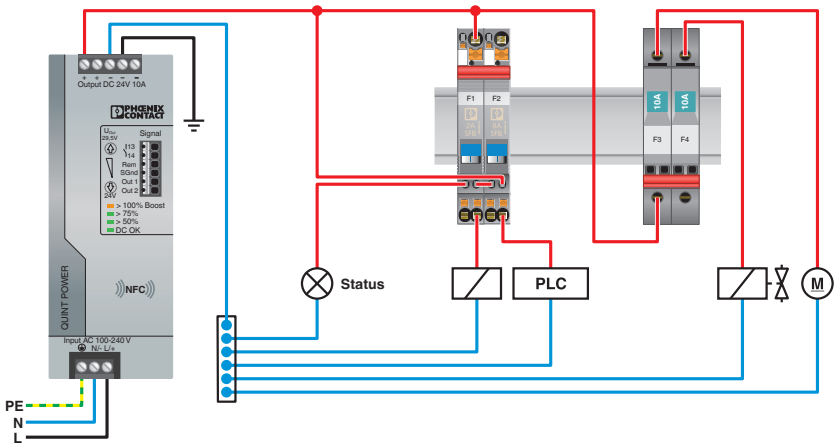

Diagram

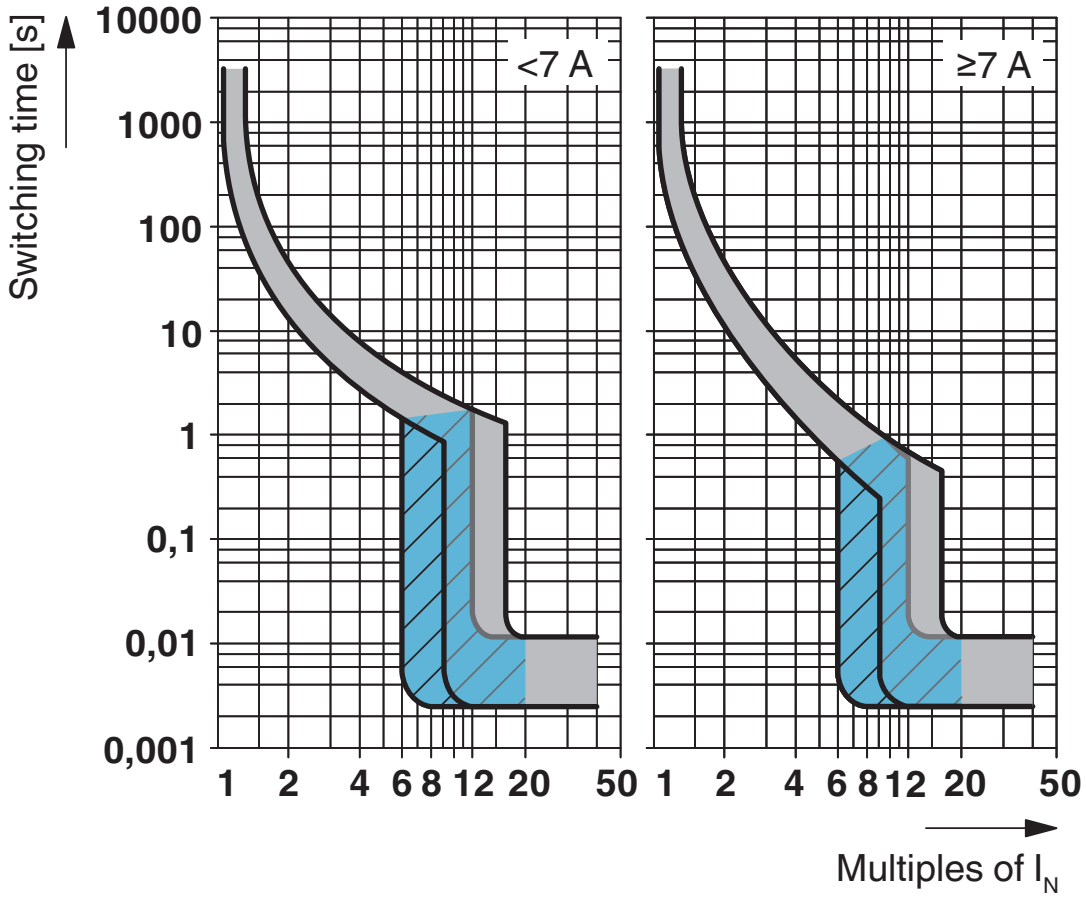


Trigger characteristic

Diagram

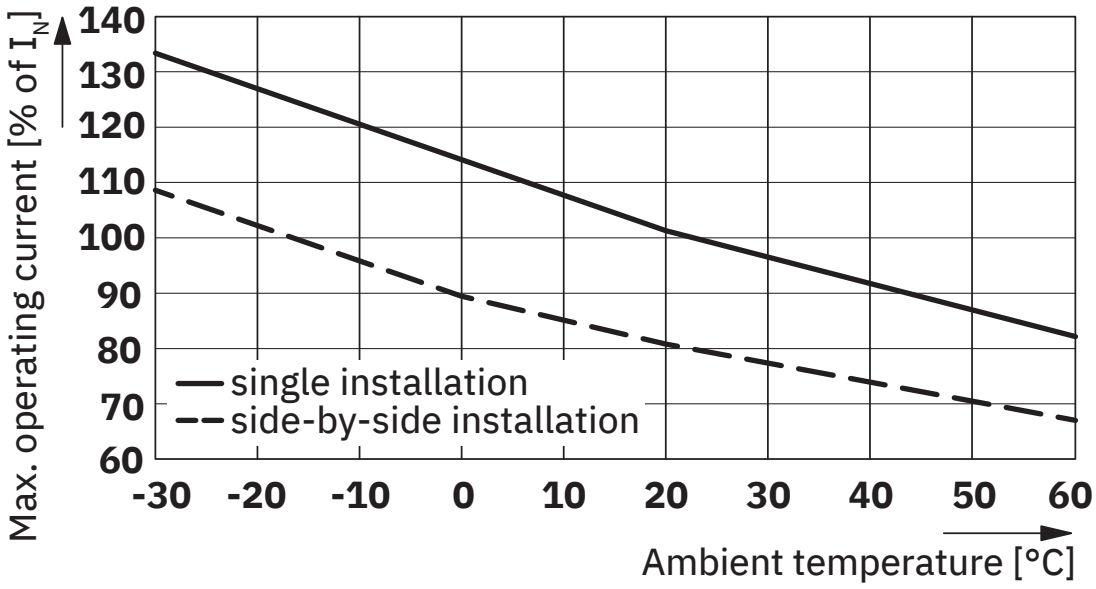


Operating current correction factor

Block diagram

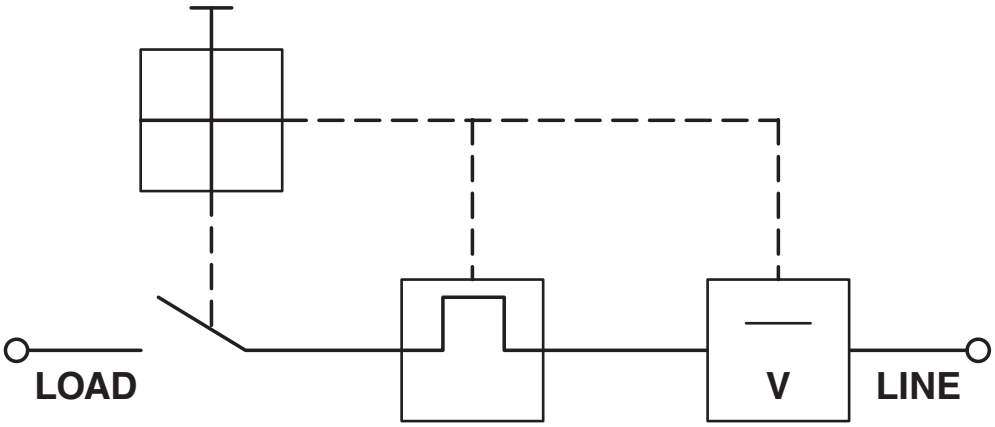

## Approvals

To download certificates, visit the product detail page: https://www.phoenixcontact.com/us/products/0916605

**cUL Recognized**
Approval ID: FILE E 140459

**UL Recognized**
Approval ID: FILE E 140459

**VDE Zeichengenehmigung**
Approval ID: 40028127

**CSA**
Approval ID: 250505

## Classifications

### ECLASS

| | |
|---|---|
| ECLASS-13.0 | 27140401 |
| ECLASS-15.0 | 27140401 |

### ETIM

| | |
|---|---|
| ETIM 10.0 | EC003538 |

### UNSPSC

| | |
|---|---|
| UNSPSC 21.0 | 39121400 |

## Environmental product compliance

EU RoHS

| | |
|---|---|
| Fulfills EU RoHS substance requirements | Yes, No exemptions |

China RoHS

| | |
|---|---|
| Environment friendly use period (EFUP) | EFUP-E |
| | No hazardous substances above the limits |

EU REACH SVHC

| | |
|---|---|
| REACH candidate substance (CAS No.) | No substance above 0.1 wt% |

EF3.1 Climate Change

| | |
|---|---|
| CO2e kg | 5.029 kg CO2e |


Phoenix Contact 2026 © - all rights reserved
https://www.phoenixcontact.com



Phoenix Contact USA
586 Fulling Mill Road
Middletown, PA 17057, United States
(+717) 944-1300
info@phoenixcon.com