TMC 1 F1 100 3,0A - Thermal-magnetic device circuit breaker

0914112

https://www.phoenixcontact.com/us/products/0914112

Please be informed that the data shown in this PDF document is generated from our online catalog. Please find the complete data in the user documentation. Our general terms of use for downloads are valid.



Thermal-magnetic device circuit breaker, 1-position, connection method: Screw connection, nominal current: 3 A, tripping characteristic: F1 (fast blow), fuse type: Automatic device, mounting type: DIN rail: 35 mm, rated current: 3 A

Commercial data

Item number	0914112
Packing unit	6 pc
Minimum order quantity	1 pc
Sales key	CL04
Product key	CLA121
GTIN	4017918008796
Weight per piece (including packing)	92 g
Weight per piece (excluding packing)	70.64 g
Customs tariff number	85362010
Country of origin	DE

Technical data

Product properties

Product type	Thermomagnetic device circuit breakers
Product family	TMC
Type	DIN rail module, one-piece
Number of positions	1
Number of connections	4
Number of rows	2
No. of channels	1

Insulation characteristics

Overvoltage category	II
Degree of pollution	2

Electrical properties

Fuse type	Automatic device

General

Rated voltage	65 V DC
Rated current I_N	3 A
Rated surge voltage	2.5 kV
Insulation resistance R_{iso}	> 100 MΩ (500 V DC)
Auxiliary circuit	240 V AC / 1 A (Low-induction)
	65 V AC / 1 A (Low-induction)
Tripping method	TM (thermal-magnetic)
Device resistance	0.18 Ω
Rated short-circuit switching capacity I_{cn}	2500 A (32 V DC)
Short-circuit switching capacity	2000 A (UL 1077: 65 V DC)
Dielectric strength	3000 V AC (Actuation area)
	3000 V AC (Main to auxiliary circuit)
Switching cycles, max.	10000 (At 1 x I_n, inductive)
Fuse	F1 (fast blow)
Contact switching type	1 N/O contact

Indicator/remote signaling

Connection name	Auxiliary contact
Operating voltage	240 V AC
	65 V DC
Operating current	3 A AC (Low-induction)

Connection data

Main contact

Connection method	Screw connection

Screw thread	M3
Tightening torque	0.6 ... 0.8 Nm
Stripping length	12 mm
Internal cylindrical gage	A3
Conductor cross-section rigid	0.2 mm² ... 6 mm²
Cross section AWG	24 ... 10 (converted acc. to IEC)
Conductor cross-section flexible	0.2 mm² ... 4 mm²
Conductor cross-section flexible (ferrule without plastic sleeve)	0.25 mm² ... 4 mm²
Flexible conductor cross-section (ferrule with plastic sleeve)	0.25 mm² ... 2.5 mm²
2 conductors with same cross section, rigid	0.2 mm² ... 0.75 mm²
2 conductors with same cross section, flexible	0.2 mm² ... 0.75 mm²
2 conductors with same cross section, flexible, with ferrule without plastic sleeve	0.25 mm² ... 1 mm²
2 conductors with the same cross section, flexible, with TWIN ferrule with plastic sleeve	0.5 mm² ... 2.5 mm²
Nominal current	3 A

Auxiliary contact

Connection method	Screw connection
Screw thread	M3
Tightening torque	0.6 ... 0.8 Nm
Stripping length	12 mm
Internal cylindrical gage	A1
Conductor cross-section rigid	0.2 mm² ... 2.5 mm²
Cross section AWG	24 ... 14 (converted acc. to IEC)
Conductor cross-section flexible	0.2 mm² ... 1.5 mm²
Conductor cross-section flexible (ferrule without plastic sleeve)	0.25 mm² ... 2.5 mm²
Flexible conductor cross-section (ferrule with plastic sleeve)	0.25 mm² ... 1.5 mm²
2 conductors with same cross section, rigid	0.2 m² ... 0.75 m²
2 conductors with same cross section, flexible	0.2 m² ... 0.75 mm²
2 conductors with same cross section, flexible, with ferrule without plastic sleeve	0.25 mm² ... 0.5 mm²
2 conductors with the same cross section, flexible, with TWIN ferrule with plastic sleeve	0.5 mm² ... 0.75 mm²

Main contact

Connection method	Screw connection
Screw thread	M3
Tightening torque	0.6 Nm ... 0.8 Nm
Stripping length	12 mm
Conductor cross-section flexible	0.2 mm² ... 4 mm²
Conductor cross-section rigid	0.2 mm² ... 6 mm²
Conductor cross-section AWG	24 ... 10
2 conductors with the same cross section, flexible, with TWIN ferrule with plastic sleeve	0.5 mm² ... 2.5 mm²
Conductor cross-section, flexible, with ferrule, with plastic sleeve	0.25 mm² ... 2.5 mm²

Conductor cross-section, flexible, with ferrule, without plastic sleeve	0.25 mm² ... 4 mm²

Auxiliary contact

Connection method	Screw connection
Screw thread	M3
Tightening torque	0.6 Nm ... 0.8 Nm
Stripping length	12 mm
Conductor cross-section flexible	0.2 mm² ... 1.5 mm²
Conductor cross-section rigid	0.2 mm² ... 2.5 mm²
Conductor cross-section AWG	24 ... 14
Conductor cross-section, flexible, with ferrule, with plastic sleeve	0.25 mm² ... 1.5 mm²
Conductor cross-section, flexible, with ferrule, without plastic sleeve	0.25 mm² ... 2.5 mm²

Dimensions

Dimensional drawing	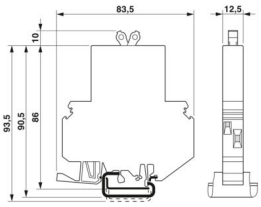
Width	12.5 mm
Height	82.5 mm
Depth	96 mm

Material specifications

Color	black (RAL 9005)
Flammability rating according to UL 94	V-2
Insulating material group	II
Insulating material	PA66

Mechanical properties

Mechanical data

Open side panel	No

Environmental and real-life conditions

Ambient conditions

Degree of protection	IP30 (Actuation area)
	IP20 (Connection area)
Ambient temperature (operation)	-30 °C ... 60 °C
Humidity test	240 h, 95 % RH, 40 °C

Standards and regulations

Standards/specifications	EN 60934
Standards/specifications	UL 1077

Mounting

Mounting type	DIN rail: 35 mm

Drawings

Dimensional drawing

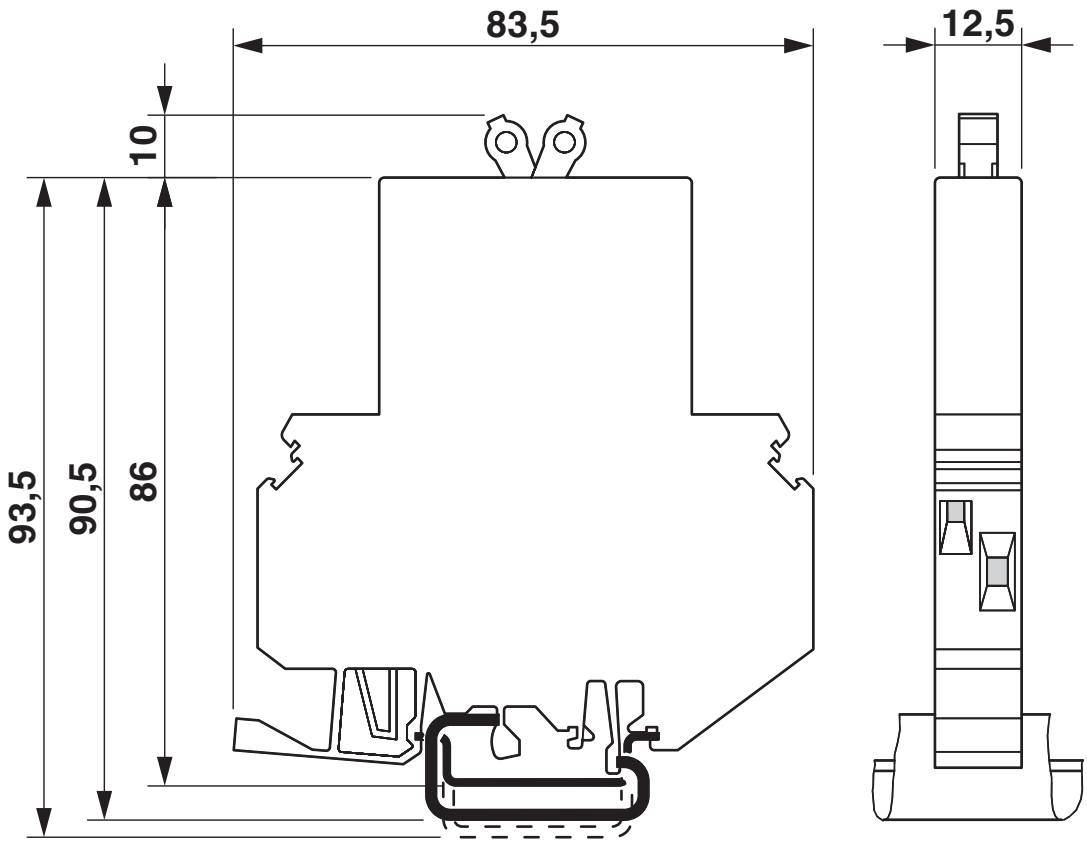

Diagram

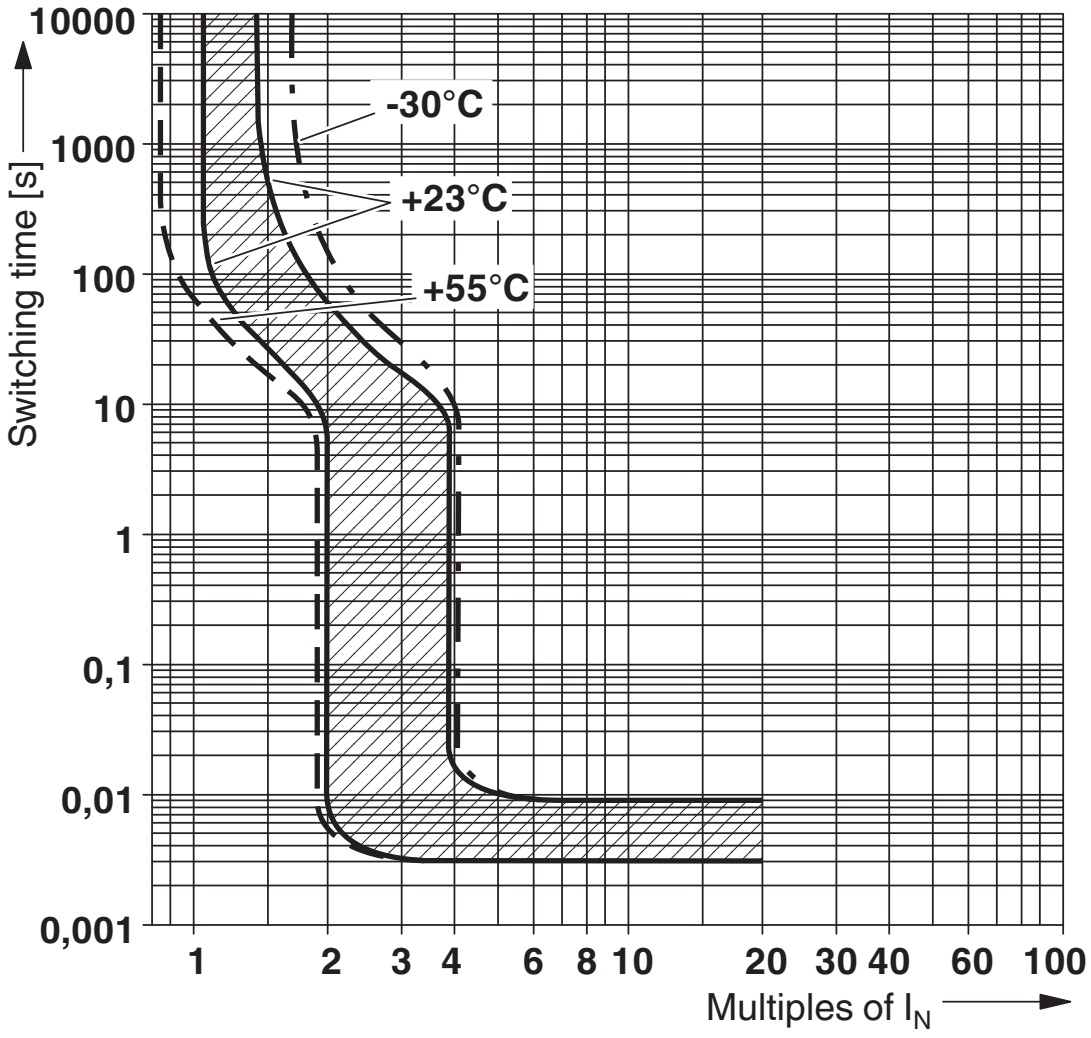
10000
1000
100
10
1
0,1
0,01
0,001
Switching time [s]
-30°C
+23°C
+55°C
1
2
3
4
6
8
10
20
30
40
60
100
Multiples of I_N

Approvals

To download certificates, visit the product detail page: https://www.phoenixcontact.com/us/products/0914112

CSA
Approval ID: 074317

UL Recognized
Approval ID: FILE E 140459

VDE Zeichengenehmigung
Approval ID: 40029348

UAE-RoHS
Approval ID: 23-10-88786

Classifications

ECLASS

ECLASS-13.0	27140401
ECLASS-15.0	27140401

ETIM

ETIM 10.0	EC003538

UNSPSC

UNSPSC 21.0	39121400

Environmental product compliance

EU RoHS

Fulfills EU RoHS substance requirements	Yes
Exemption	6(c)

China RoHS

Environment friendly use period (EFUP)	EFUP-25
	An article-related China RoHS declaration table can be found in the download area for the respective article under "Manufacturer declaration". For all articles with EFUP-E, no China RoHS declaration table issued and required.

EU REACH SVHC

REACH candidate substance (CAS No.)	Lead(CAS: 7439-92-1)
SCIP	b75b5a58-913a-40ea-92ec-cd8f63000f02

EF3.1 Climate Change

CO2e kg	3.748 kg CO2e

Phoenix Contact 2026 © - all rights reserved
https://www.phoenixcontact.com

Phoenix Contact USA
586 Fulling Mill Road
Middletown, PA 17057, United States
(+717) 944-1300
info@phoenixcon.com