E PE A 75X80X75 - Empty enclosure

0899338

https://www.phoenixcontact.com/us/products/0899338

Please be informed that the data shown in this PDF document is generated from our online catalog. Please find the complete data in the user documentation. Our general terms of use for downloads are valid.



The figure shows a similar product

Empty enclosure, material: Polyester fiberglass reinforced, squirrell gray RAL 7000, 75 mm x 80 mm x 75 mm, type of locking: Screw-on cover

Commercial data

Item number	0899338
Packing unit	1 pc
Minimum order quantity	1 pc
Sales key	BH91
Product key	BH9141
GTIN	4055626276076
Weight per piece (including packing)	639 g
Weight per piece (excluding packing)	308 g
Customs tariff number	85389099
Country of origin	IN

Technical data

Notes

General	Prepared for direct installation of a DIN rail

Product properties

Product type	Terminal box
Type	Empty enclosure with cover

Insulation characteristics

Protection class	II

Dimensions

Dimensional drawing	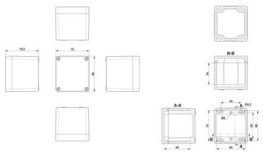
Width	75 mm
Height	80 mm
Depth	75 mm
Clearance width, maximum DIN rail length	63 mm
max. assembly length	49 mm

Material specifications

Color	squirrell gray RAL 7000
Material	Polyester fiberglass reinforced
Flammability rating according to UL 94	V0
Seal material	Chloroprene
Components	halogen-free

Mechanical properties

General

Type of locking (GRP)	Screw-on cover Plus/minus screw

Environmental and real-life conditions

Degree of protection (IP code)

Degree of protection	IP66

Ambient conditions

Ambient temperature (operation)	-40 °C ... 100 °C

Mounting

Assembly note	Integrated blind hole

	External fixing clips available as an option
Direct DIN rail mounting	yes
Useable DIN rail type	NS 15

Drawings

Dimensional drawing

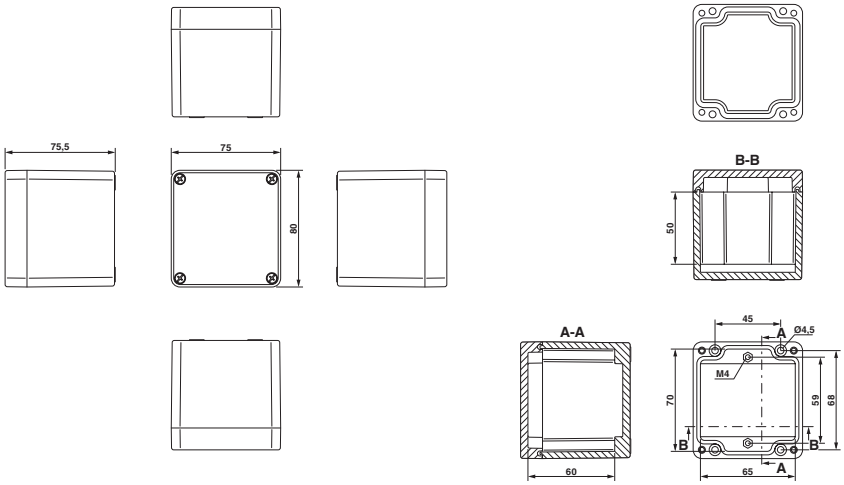

Schematic diagram

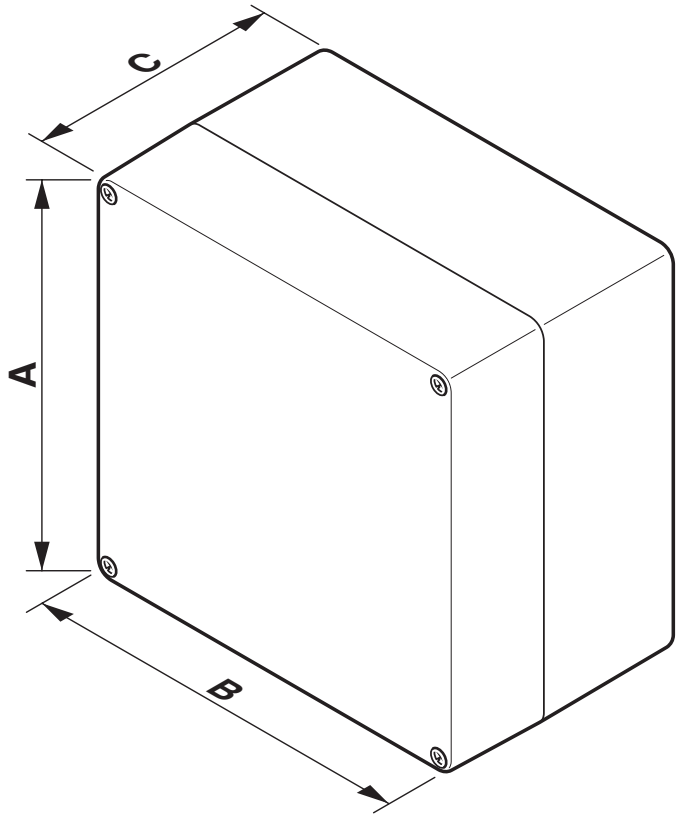

Classifications

ECLASS

ECLASS-13.0	27180101
ECLASS-15.0	27180101

ETIM

ETIM 10.0	EC000261

UNSPSC

UNSPSC 21.0	31261500

Environmental product compliance

EU RoHS

Fulfills EU RoHS substance requirements	Yes, No exemptions

China RoHS

Environment friendly use period (EFUP)	EFUP-E
	No hazardous substances above the limits

EU REACH SVHC

REACH candidate substance (CAS No.)	No substance above 0.1 wt%

Phoenix Contact 2026 © - all rights reserved
https://www.phoenixcontact.com

Phoenix Contact USA
586 Fulling Mill Road
Middletown, PA 17057, United States
(+717) 944-1300
info@phoenixcon.com