NS 35/ 7,5 AL PERF 2000MM - DIN rail perforated

0814681

https://www.phoenixcontact.com/us/products/0814681

Please be informed that the data shown in this PDF document is generated from our online catalog. Please find the complete data in the user documentation. Our general terms of use for downloads are valid.



DIN rail perforated, Pack of 25 (50 m), acc. to EN 60715, material: Aluminum, uncoated, Standard profile, color: aluminum color

Commercial data

Item number	0814681
Packing unit	25 m
Minimum order quantity	50 m
Sales key	BE72
Product key	BE7245
GTIN	4017918982508
Weight per piece (including packing)	213 g
Weight per piece (excluding packing)	213 g
Customs tariff number	76042990
Country of origin	DE

Technical data

Product properties

Product type	DIN rail

Dimensions

Dimensional drawing	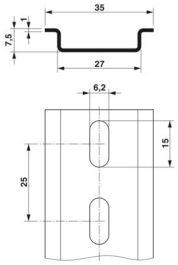
Width	35 mm
Hole width	15 mm
Hole height	6.2 mm
Depth	7.5 mm
Length	2000 mm
Drill hole spacing	25 mm

Material specifications

Color	aluminum color
Material	Aluminum
Coating	uncoated

Standards and regulations

Tests	acc. to EN 60715

Electrical tests

Short-time withstand current

Equivalent E-Cu cross-section	35 mm²
Short-time current resistance 1s	4.2 kA
Max. permissible thermal nominal current for PEN function	125 A

Drawings

Dimensional drawing

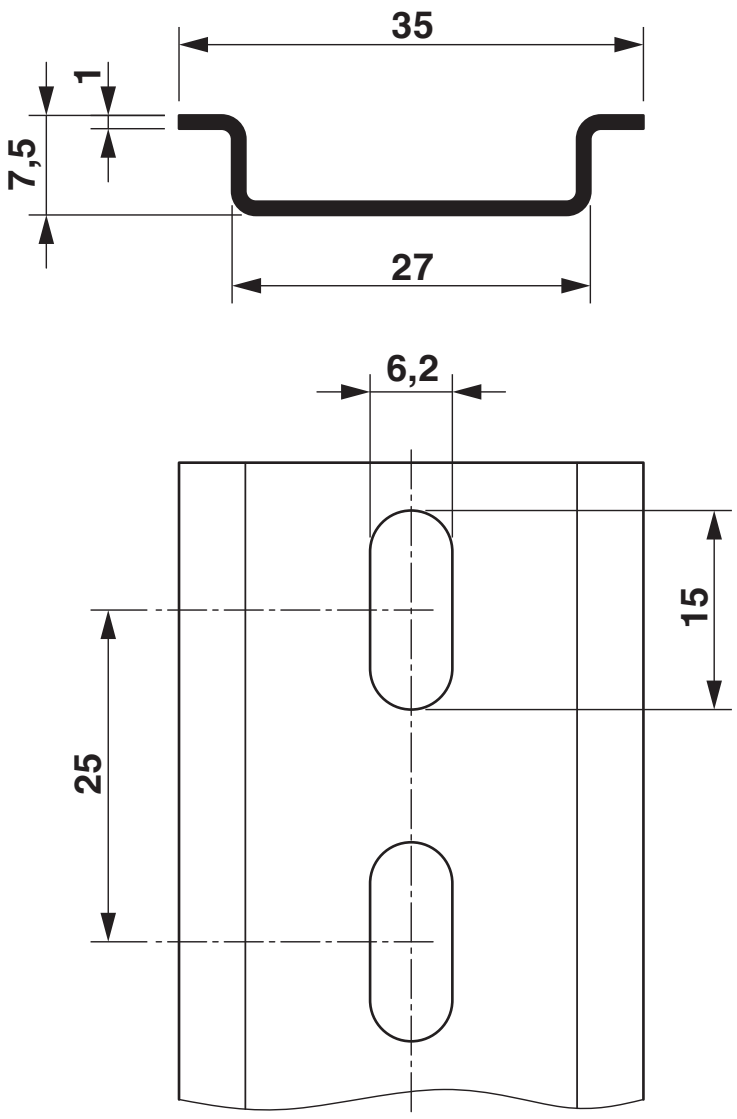

Classifications

ECLASS

ECLASS-13.0	27400602
ECLASS-15.0	27400602

ETIM

ETIM 10.0	EC001285

UNSPSC

UNSPSC 21.0	39121700

Environmental product compliance

EU RoHS

Fulfills EU RoHS substance requirements	Yes, No exemptions

China RoHS

Environment friendly use period (EFUP)	EFUP-E
	No hazardous substances above the limits

EU REACH SVHC

REACH candidate substance (CAS No.)	No substance above 0.1 wt%

EF3.1 Climate Change

CO2e kg	2.264 kg CO2e

Phoenix Contact 2026 © - all rights reserved
https://www.phoenixcontact.com

Phoenix Contact USA
586 Fulling Mill Road
Middletown, PA 17057, United States
(+717) 944-1300
info@phoenixcon.com