CLIPFIX 35 WH - End bracket

0802723

https://www.phoenixcontact.com/us/products/0802723

Please be informed that the data shown in this PDF document is generated from our online catalog. Please find the complete data in the user documentation. Our general terms of use for downloads are valid.



Quick mounting end clamp, for 35 mm NS 35/7,5 or NS 35/15 DIN rail, can be fitted with ZB 8 and ZB 8/27 zack marker strips, KLM 2 and KLM terminal strip markers, width: 9.5 mm, color: white

Your advantages

- Design width of just 9.5 mm
- Large-surface marking
- Phoenix Contact has engineered its CLIPFIX end brackets to maintain a secure grip on the various DIN rail systems

Commercial data

Item number	0802723
Packing unit	50 pc
Minimum order quantity	50 pc
Sales key	BE07
Product key	BE7111
GTIN	4046356860819
Weight per piece (including packing)	5.24 g
Weight per piece (excluding packing)	5 g
Customs tariff number	39269097
Country of origin	PL

Technical data

Product properties

Product type	End bracket

Dimensions

Dimensional drawing	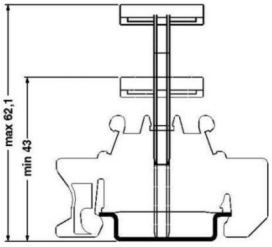
Width	9.5 mm
Height	55.6 mm
Depth on NS 35/7,5	35.5 mm
Length	55.6 mm

Material specifications

Color	white (RAL 9010)
Material	PA
Flammability rating according to UL 94	V2
Static insulating material application in cold	-40 °C
Relative insulation material temperature index (Elec., UL 746 B)	125 °C

Environmental and real-life conditions

Ambient conditions

Ambient temperature (operation)	-60 °C ... 105 °C (max. short-term operating temperature RTI Elec.)
Ambient temperature (storage/transport)	-25 °C ... 60 °C (for a short time, not exceeding 24 h, -60 °C to +70 °C)
Ambient temperature (assembly)	-5 °C ... 70 °C
Ambient temperature (actuation)	-5 °C ... 70 °C
Permissible humidity (storage/transport)	30 % ... 70 %

Mounting

Mounting type	NS 35/7,5
	NS 35/15

Drawings

Dimensional drawing

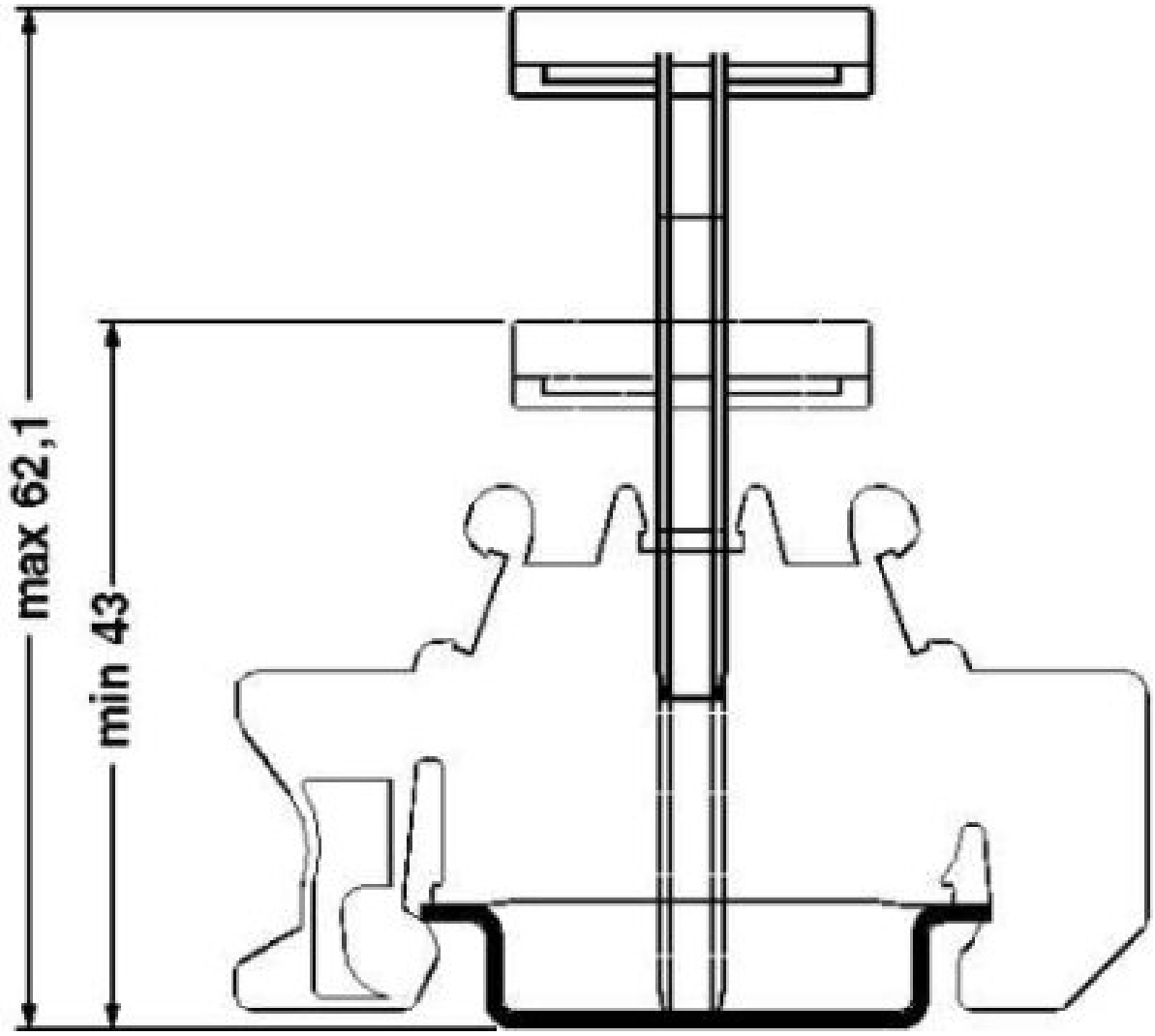

Dimensional drawing

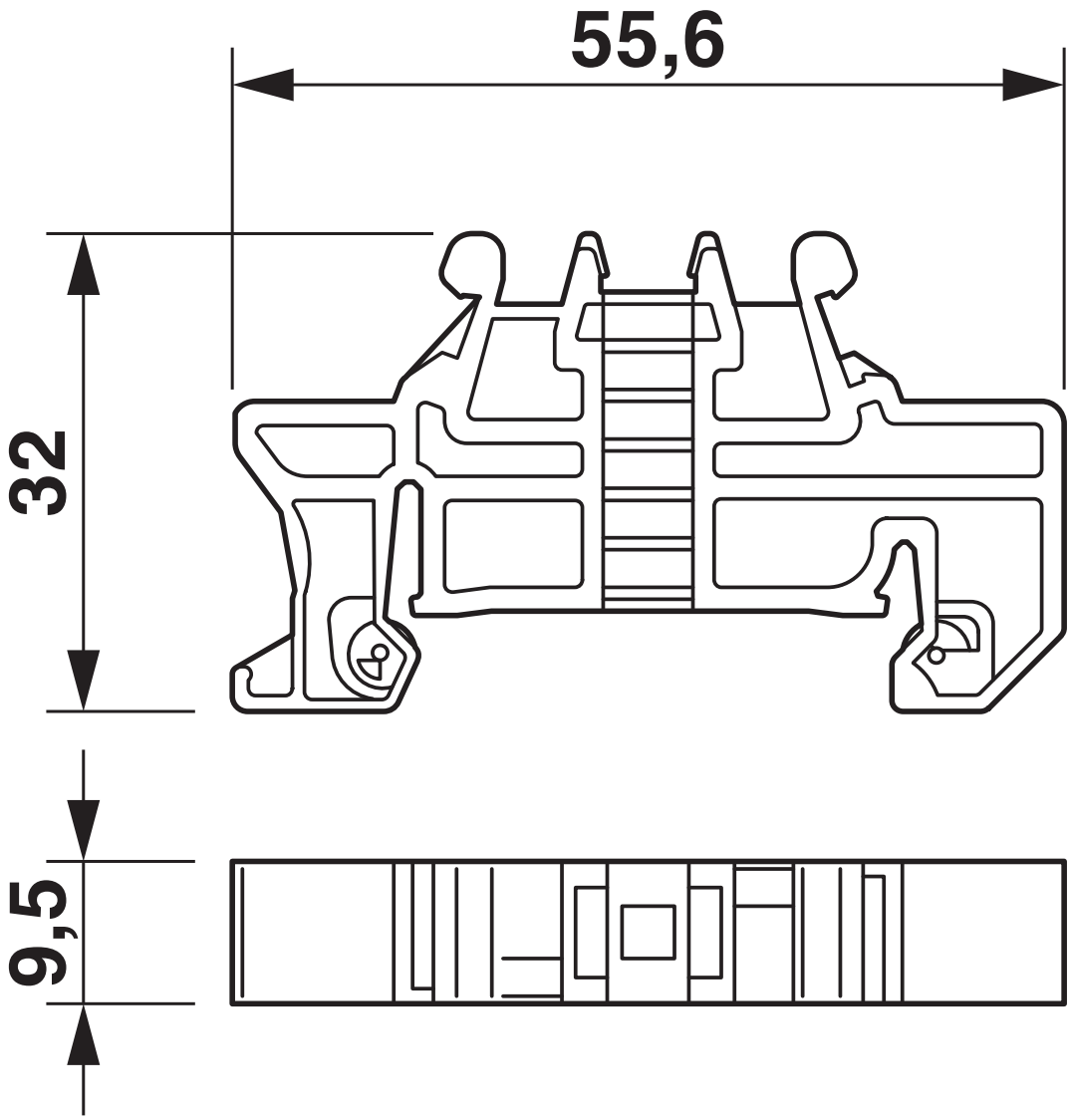

Classifications

ECLASS

ECLASS-13.0	27250302
ECLASS-15.0	27250302

ETIM

ETIM 10.0	EC001041

UNSPSC

UNSPSC 21.0	39121400

Environmental product compliance

EU RoHS

Fulfills EU RoHS substance requirements	Yes, No exemptions

China RoHS

Environment friendly use period (EFUP)	EFUP-E
	No hazardous substances above the limits

EU REACH SVHC

REACH candidate substance (CAS No.)	No substance above 0.1 wt%

EF3.1 Climate Change

CO2e kg	0.042 kg CO2e

Phoenix Contact 2026 © - all rights reserved
https://www.phoenixcontact.com

Phoenix Contact USA
586 Fulling Mill Road
Middletown, PA 17057, United States
(+717) 944-1300
info@phoenixcon.com