CES-B24-HFFS-PLBK - Sealing frame

0801661

https://www.phoenixcontact.com/us/products/0801661

Please be informed that the data shown in this PDF document is generated from our online catalog. Please find the complete data in the user documentation. Our general terms of use for downloads are valid.



Sealing frame, With locking latch, design: B24, Number of cable seals (small): 10, material: PA (halogen-free), color: black, length: 147 mm, width: 58 mm, height: 20 mm

Your advantages

- Can also be used for standard panel cutouts for heavy-duty industrial connectors

Commercial data

Item number	0801661
Packing unit	1 pc
Minimum order quantity	1 pc
Sales key	BF67
Product key	AF7CAX
GTIN	4046356674119
Weight per piece (including packing)	182 g
Weight per piece (excluding packing)	171 g
Customs tariff number	39269097
Country of origin	PL

Technical data

Notes

Note on application	Mounting screws not supplied as standard. The maximum width of the panel cutout must not exceed 51 mm (instead of 35 mm for heavy-duty industrial connectors).

Product properties

Product type	Frame for cable sleeves
Type	B24
Frame type	Sealing frame

Connection data

Tightening torque	1.8 Nm (Mounting screw, M4 (ISO 4762/DIN 912))

Dimensions

Dimensional drawing	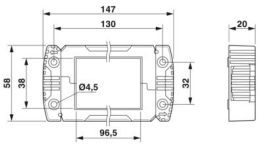
Width	58 mm
Height	20 mm
Length	147 mm
Drill hole distance, horizontal	32 mm
Drill hole distance, vertical	130 mm
Hole diameter	5.5 mm

Installation dimensions

Width of the assembly cutout	35 mm
Length of the assembly cutout	113 mm

Material specifications

Color	black (RAL 9005)
Material	PA (halogen-free)
Flammability rating according to UL 94	V0

Characteristics

Number of cable seals	2 ... 10 (small seals, depending on the number of large seals installed)
	0 ... 2 (large seals, depending on the number of small seals installed)

Environmental and real-life conditions

Ambient conditions

Degree of protection	IP54
Ambient temperature (operation)	-40 °C ... 120 °C (static)

Mounting

Assembly note	One large sleeve requires the space of 4 small sleeves, M4 mounting screws (ISO 4762/DIN 912), torque for mounting screw: 1.8 Nm
	A video tutorial on how to assemble the product can be found in the Downloads area, in the Video category.

Drawings

Dimensional drawing

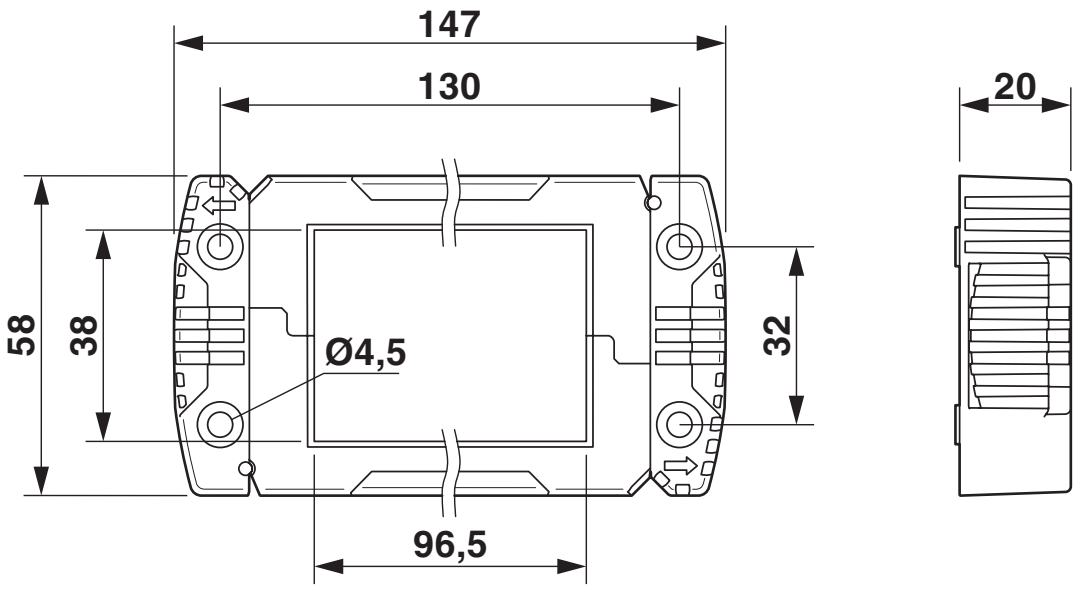

Dimensional drawing

Dimensional drawing

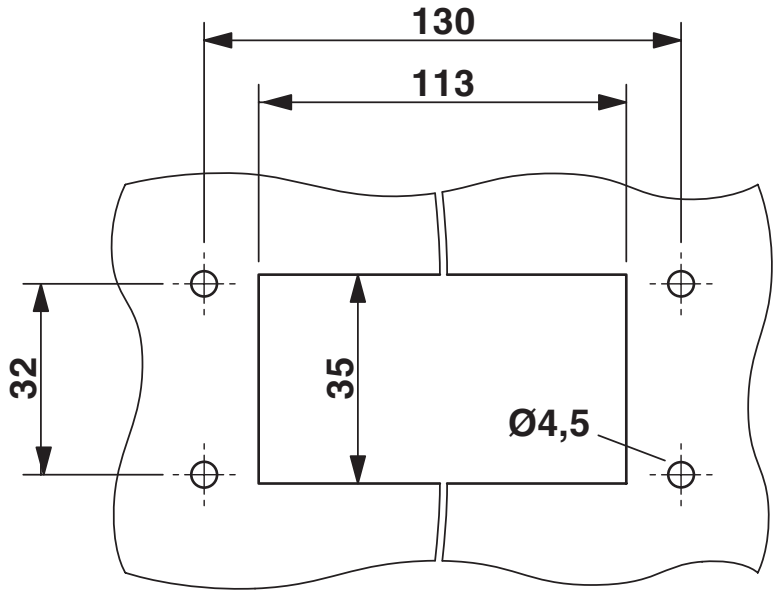

Mounting cutout

Approvals

To download certificates, visit the product detail page: https://www.phoenixcontact.com/us/products/0801661

cUL Recognized
Approval ID: E255026

UL Recognized
Approval ID: E255026

DNV
Approval ID: TAE00003VJ

Classifications

ECLASS

ECLASS-13.0	27142421
ECLASS-15.0	27182815

ETIM

ETIM 10.0	EC002624

UNSPSC

UNSPSC 21.0	31261500

Environmental product compliance

EU RoHS

Fulfills EU RoHS substance requirements	Yes, No exemptions

China RoHS

Environment friendly use period (EFUP)	EFUP-E
	No hazardous substances above the limits

EU REACH SVHC

REACH candidate substance (CAS No.)	No substance above 0.1 wt%

EF3.1 Climate Change

CO2e kg	1.84 kg CO2e

Phoenix Contact 2026 © - all rights reserved
https://www.phoenixcontact.com

Phoenix Contact USA
586 Fulling Mill Road
Middletown, PA 17057, United States
(+717) 944-1300
info@phoenixcon.com