CES-SRG-BK-14 - Cable sleeve

0801615

https://www.phoenixcontact.com/us/products/0801615

Please be informed that the data shown in this PDF document is generated from our online catalog. Please find the complete data in the user documentation. Our general terms of use for downloads are valid.



Cable sleeve, small, no. of conductors: 1, type: Round cable, slotted, external cable diameter: 1x 13 mm ... 14 mm, material: NBR, color: black, length: 29.5 mm, width: 19.5 mm, height: 17 mm

Product description

Slotted cable sleeve

Commercial data

Item number	0801615
Packing unit	10 pc
Minimum order quantity	1 pc
Sales key	BF67
Product key	AF7CCX
GTIN	4046356674737
Weight per piece (including packing)	6.08 g
Weight per piece (excluding packing)	6.08 g
Customs tariff number	40169997
Country of origin	TW

Technical data

Product properties

Product type	Cable sleeve
No. of conductors	1

Dimensions

Dimensional drawing	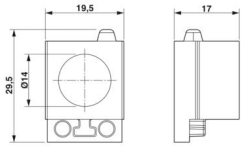
Width	19.5 mm
Height	17 mm
Length	29.5 mm

Material specifications

Material	NBR

Cable/line

External cable diameter	1x 13 mm ... 14 mm

Characteristics

Seal size	small
Design, Format	Round cable
Design, Cable seal	slotted

Environmental and real-life conditions

Ambient conditions

Degree of protection	IP54
Ambient temperature (operation)	-40 °C ... 125 °C (static)

Drawings

Dimensional drawing

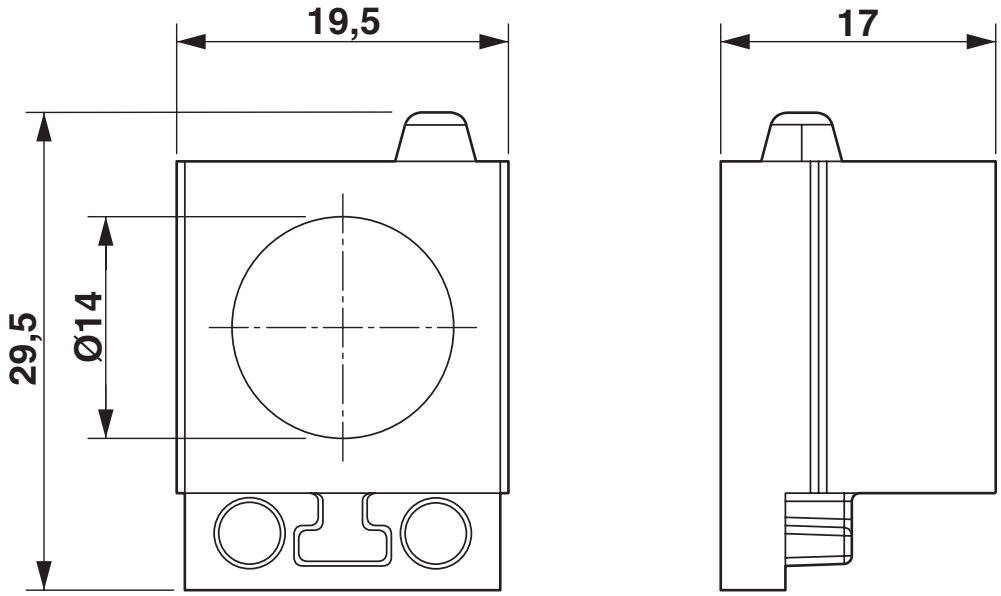

Dimensional drawing

Approvals

To download certificates, visit the product detail page: https://www.phoenixcontact.com/us/products/0801615

DNV
Approval ID: TAE00003VJ

Classifications

ECLASS

ECLASS-13.0	27144425
ECLASS-15.0	27144425

ETIM

ETIM 10.0	EC000451

UNSPSC

UNSPSC 21.0	39121400

Environmental product compliance

EU RoHS

Fulfills EU RoHS substance requirements	Yes, No exemptions

China RoHS

Environment friendly use period (EFUP)	EFUP-E
	No hazardous substances above the limits

EU REACH SVHC

REACH candidate substance (CAS No.)	No substance above 0.1 wt%

EF3.1 Climate Change

CO2e kg	0.539 kg CO2e

Phoenix Contact 2026 © - all rights reserved
https://www.phoenixcontact.com

Phoenix Contact USA
586 Fulling Mill Road
Middletown, PA 17057, United States
(+717) 944-1300
info@phoenixcon.com