TCP 0,5A - Thermal device circuit breaker

0712152

https://www.phoenixcontact.com/us/products/0712152

Please be informed that the data shown in this PDF document is generated from our online catalog. Please find the complete data in the user documentation. Our general terms of use for downloads are valid.



1-channel thermal device circuit breaker for protecting loads at 250 V AC / 72 V DC in the event of an overload. For installation on fuse terminal blocks and interfaces for flat plug-in fuse of type C according to standard ISO 8820-3. With fixed nominal current: 0.5 A

Your advantages

- Fast, replacement part-free recommissioning after an event with the reconnection options
- Easy to retrofit in existing systems with vehicle flat-type fuses with identical pin connector pattern
- System disconnection for maintenance actions via the integrated device switch

ELEKTROGERÄTE RÜCKNAHME

ELEKTROGERÄTE RÜCKNAHME

Commercial data

Item number	0712152
Packing unit	1 pc
Minimum order quantity	1 pc
Sales key	CL15
Product key	CLA111
GTIN	4017918848347
Weight per piece (including packing)	11.35 g
Weight per piece (excluding packing)	11.12 g
Customs tariff number	85362010
Country of origin	ID

Technical data

Notes

General	When mounted in rows, the nominal device current can be limited to just 80% or must be overdimensioned accordingly.

Product properties

Product type	Thermal device circuit breakers
Type	Male
Number of positions	1
No. of channels	1

Insulation characteristics

Overvoltage category	II
Degree of pollution	2

Electrical properties

Fuse type	Automatic device
Fuse	Slow-blow

General

Rated voltage	250 V AC
	65 V DC
	250 V AC (AC according to UL 1077)
	72 V DC (DC according to UL 1077)
Rated current I_N	0.5 A
Rated surge voltage	2.5 kV
Insulation resistance R_{iso}	> 100 MΩ (500 V DC)
Tripping method	T (thermal)
Device resistance	3.4 Ω
Rated short-circuit switching capacity I_{cn}	3 A (250 V AC / 65 V DC)
	12.5 A (30 V DC)
Short-circuit switching capacity	2000 A (250 V AC / UL 1077)
	2000 A (72 V DC / UL 1077)
Dielectric strength	3000 V AC (Actuation area)
	1500 V AC (Installation area)
Switching cycles, max.	6000 (At 1 x I_n, low-induction)
	3000 (At 1 x I_n, inductive)
	500 (At 2 x I_n, inductive)
Contact switching type	Type C in accordance with ISO 8820-3

Connection data

Nominal current	0.5 A
Nominal voltage	250 V AC
	65 V DC

Connection method	pluggable

Dimensions

Dimensional drawing	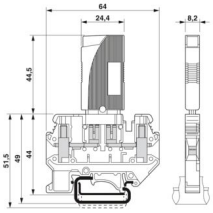
Width	8.2 mm
Height	24.4 mm
Height NS 35/7,5	55 mm
Depth	44.5 mm

Material specifications

Color	black (RAL 9005)
Flammability rating according to UL 94	V-0
Insulating material group	IIIb
Insulating material	PPS

Mechanical properties

Mechanical data

Open side panel	No

Environmental and real-life conditions

Ambient conditions

Degree of protection	IP40 (Actuation area)
Ambient temperature (operation)	-20 °C ... 60 °C
Altitude	4000 m
Humidity test	240 h, 95 % RH, 40 °C

Standards and regulations

Standards/specifications	EN 60934

Mounting

Mounting type	on base element

Drawings

Dimensional drawing

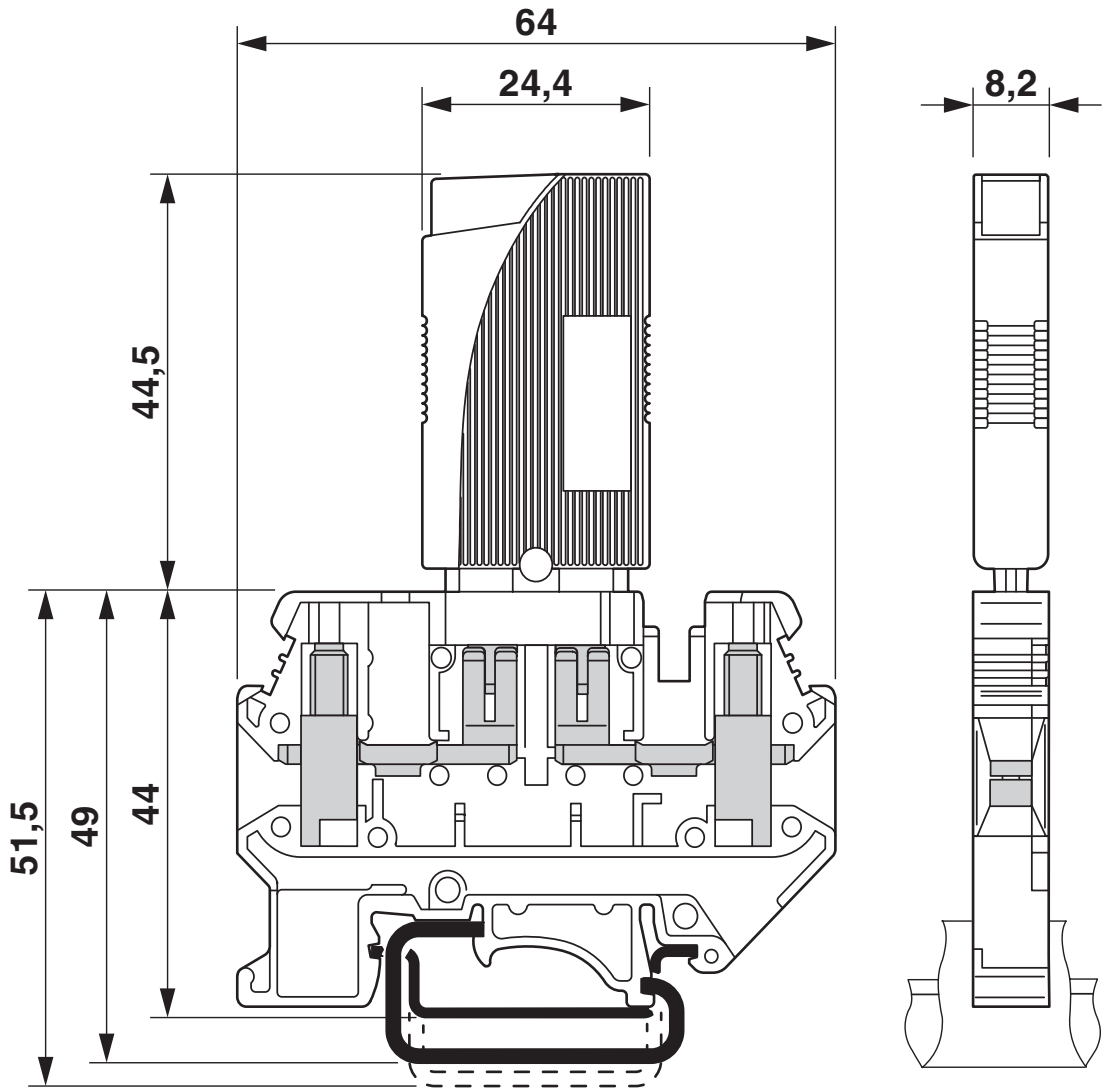

Dimensional drawing

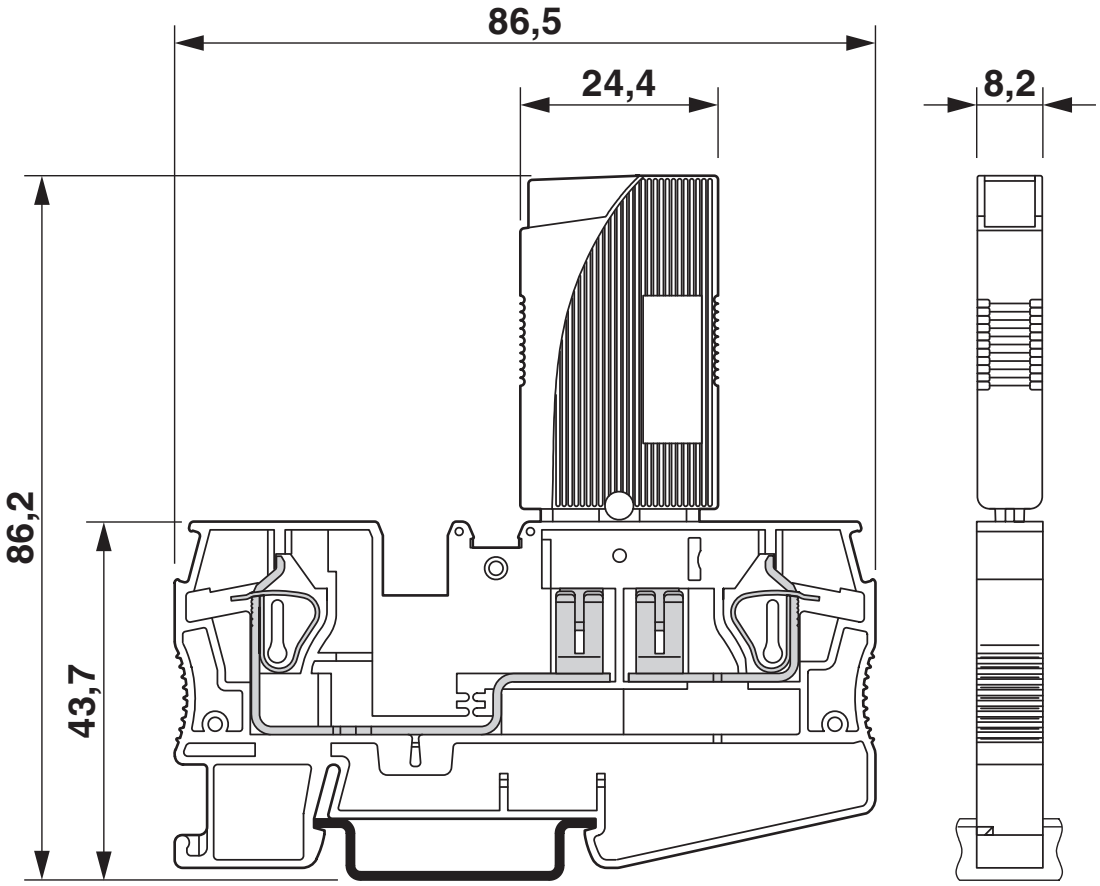

Product drawing



The figure shows the product with the base element PT 6-FSI/C-LED 24 (Item No.: 3212172).

Application drawing

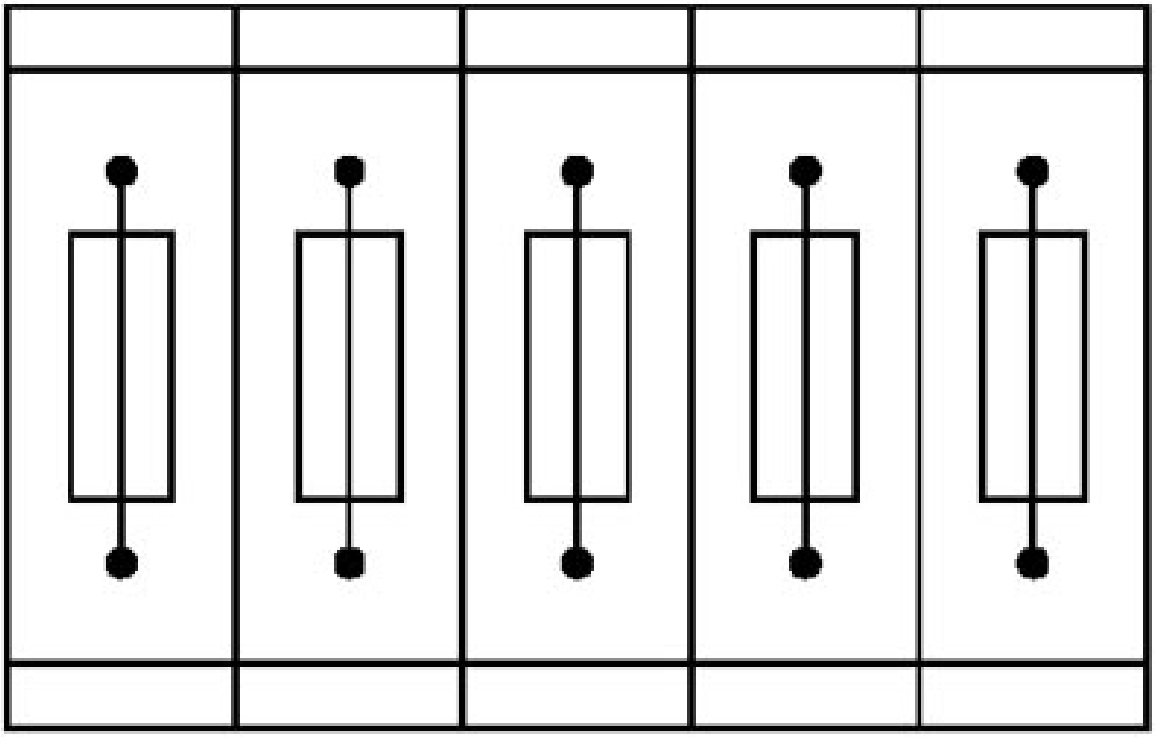

Fuse terminal blocks in interconnected arrangement,
block consisting of 5 fuse terminal blocks

Application drawing

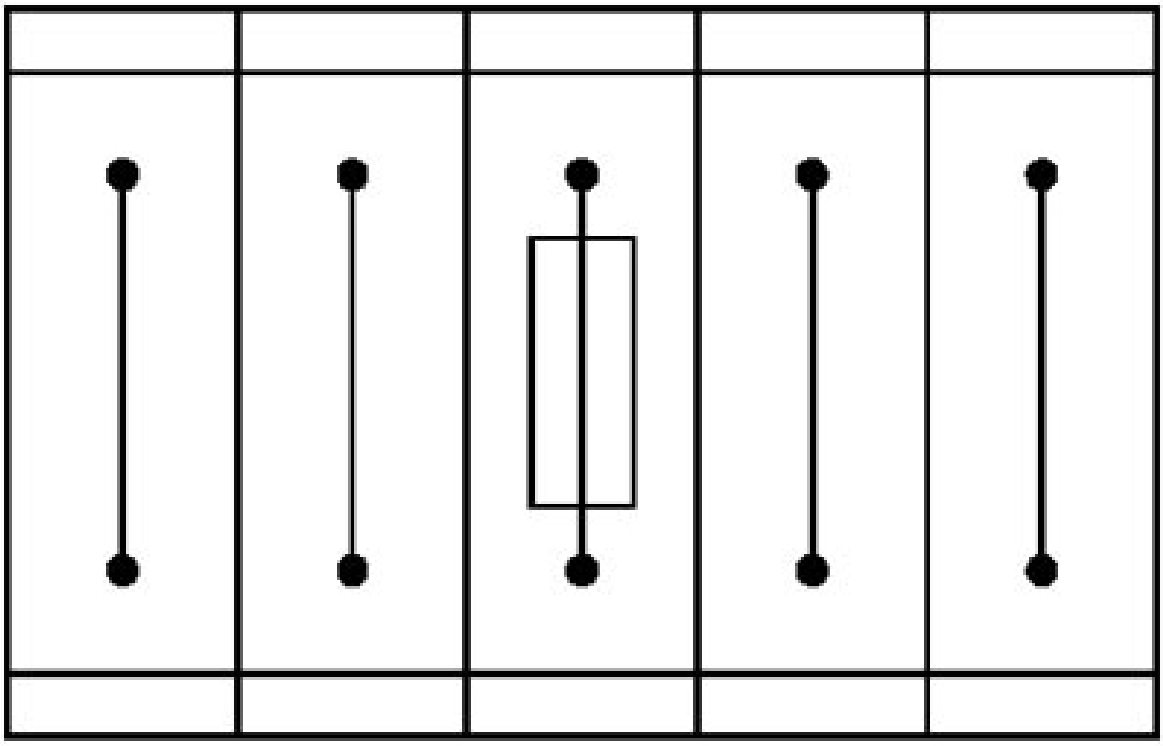

Fuse terminal block in single arrangement,
block consisting of one fuse terminal block and 4 feed-through terminal blocks

Application drawing

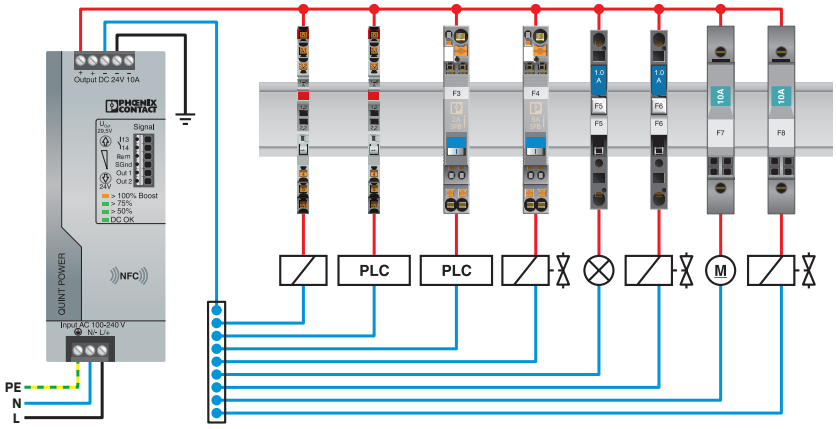

Application drawing

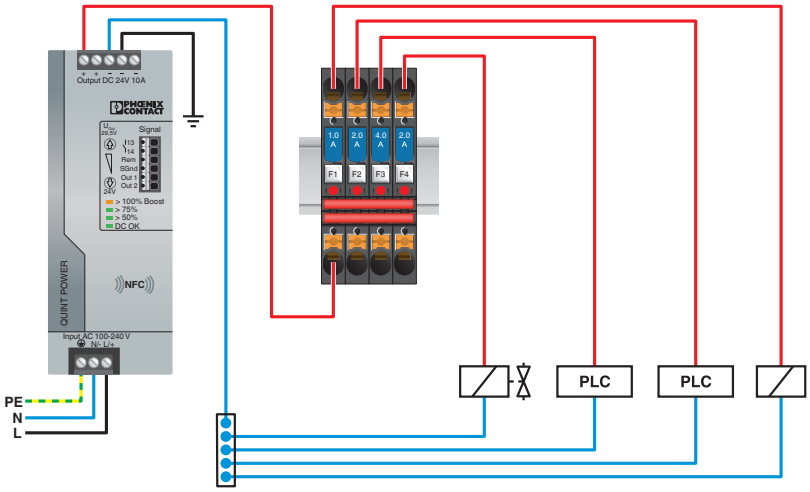

Diagram

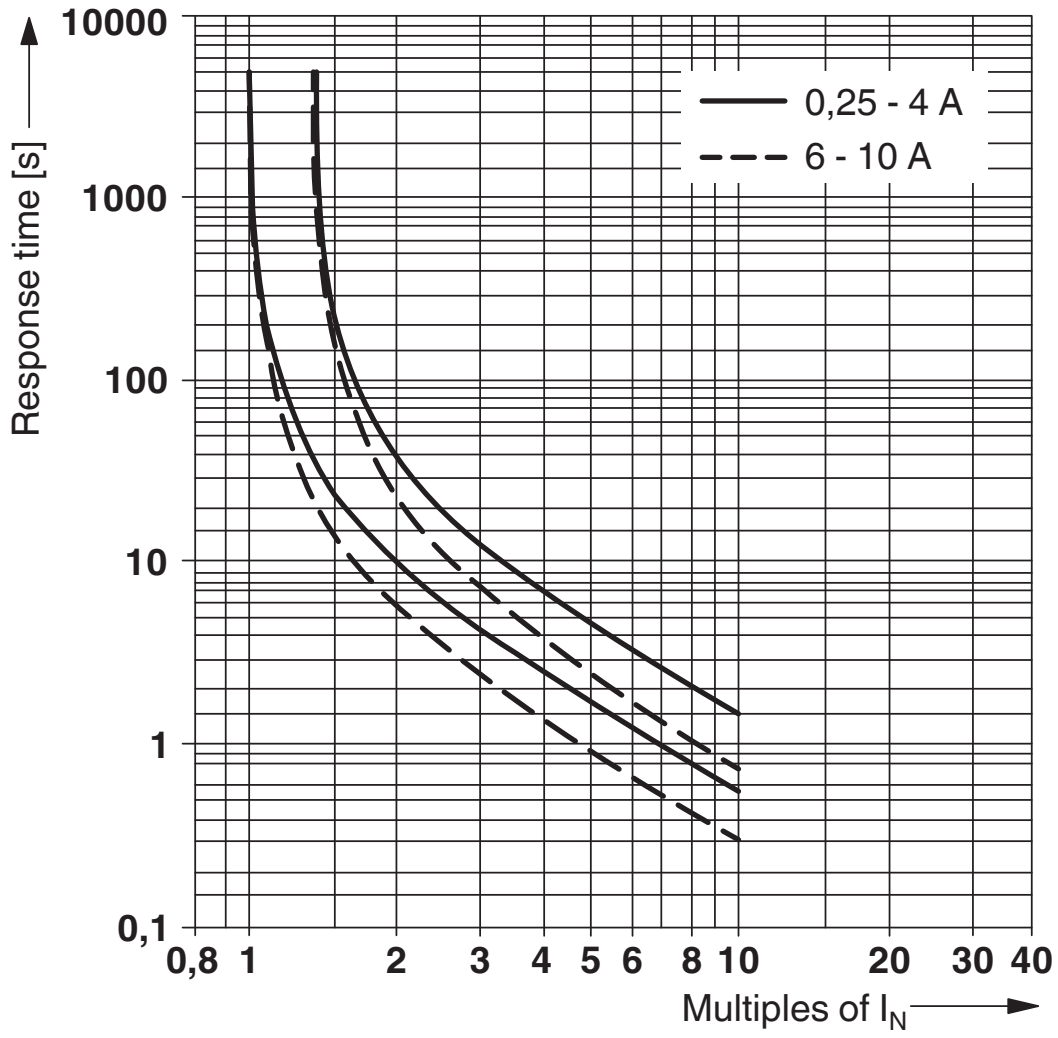

Trigger characteristic

Approvals

To download certificates, visit the product detail page: https://www.phoenixcontact.com/us/products/0712152

CSA
Approval ID: 074317

	Nominal voltage U_N	Nominal current I_N	Cross section AWG	Cross section mm^2
keine				
	250 V	0.5 A	-	-

cUL Recognized
Approval ID: FILE E 140459

UL Recognized
Approval ID: FILE E 140459

VDE Zeichengenehmigung
Approval ID: 40034332

CCC
Approval ID: 2025010307749780

UAE-RoHS
Approval ID: 23-10-88896

Classifications

ECLASS

ECLASS-13.0	27140401
ECLASS-15.0	27140401

ETIM

ETIM 10.0	EC003538

UNSPSC

UNSPSC 21.0	39121400

Environmental product compliance

EU RoHS

Fulfills EU RoHS substance requirements	Yes, No exemptions

China RoHS

Environment friendly use period (EFUP)	EFUP-E
	No hazardous substances above the limits

EU REACH SVHC

REACH candidate substance (CAS No.)	No substance above 0.1 wt%

EF3.1 Climate Change

CO2e kg	1.342 kg CO2e

Phoenix Contact 2026 © - all rights reserved
https://www.phoenixcontact.com

Phoenix Contact USA
586 Fulling Mill Road
Middletown, PA 17057, United States
(+717) 944-1300
info@phoenixcon.com