# PSBJ 3,5/18/6 FARBLOS - Test plug strip

0311391

https://www.phoenixcontact.com/us/products/0311391

Please be informed that the data shown in this PDF document is generated from our online catalog. Please find the complete data in the user documentation. Our general terms of use for downloads are valid.



Test plug strip, number of positions: 1, color: transparent

## Your advantages

- The test socket PSBJ... is used in place of the normal bridge screw and ensures the voltage pick-off on a bridged group of terminals
- The test sockets are tailored to the special applications encountered in the power supply industry

## Commercial data

| | |
|---|---|
| Item number | 0311391 |
| Packing unit | 10 pc |
| Minimum order quantity | 10 pc |
| Sales key | BE19 |
| Product key | BE1Z3X |
| GTIN | 4017918001483 |
| Weight per piece (including packing) | 3.74 g |
| Weight per piece (excluding packing) | 3.66 g |
| Customs tariff number | 85366990 |
| Country of origin | PL |

## Technical data

### Product properties

| | |
|---|---|
| Product type | Test socket |
| Number of positions | 1 |

### Connection data

| | |
|---|---|
| Connection method | Screw connection |

### Dimensions

| | |
|---|---|
| Dimensional drawing | 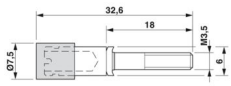  |
| Width | 6 mm |
| Height | 6 mm |
| Depth on NS 35/7,5 | 15 mm |
| Pin diameter | 4.1 mm |

### Material specifications

| | |
|---|---|
| Color | transparent |
| Material | Brass |
| Insulating material | PA |
| Contact material | PE-LD, silver-plated brass |

### Environmental and real-life conditions

#### Ambient conditions

| | |
|---|---|
| Ambient temperature (operation) | -40 °C ... 80 °C |

## Drawings

Dimensional drawing

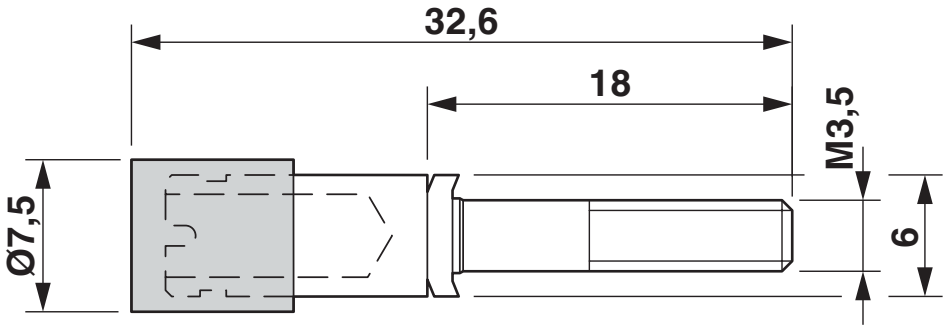

## Classifications

### ECLASS

| | |
|---|---|
| ECLASS-13.0 | 27250304 |
| ECLASS-15.0 | 27250304 |

### ETIM

| | |
|---|---|
| ETIM 10.0 | EC002555 |

### UNSPSC

| | |
|---|---|
| UNSPSC 21.0 | 20122000 |

## Environmental product compliance

EU RoHS

| | |
|---|---|
| Fulfills EU RoHS substance requirements | Yes, No exemptions |

China RoHS

| | |
|---|---|
| Environment friendly use period (EFUP) | EFUP-E |
| | No hazardous substances above the limits |

EU REACH SVHC

| | |
|---|---|
| REACH candidate substance (CAS No.) | No substance above 0.1 wt% |


Phoenix Contact 2026 © - all rights reserved
https://www.phoenixcontact.com



Phoenix Contact USA
586 Fulling Mill Road
Middletown, PA 17057, United States
(+717) 944-1300
info@phoenixcon.com